Sirius

AUSTRALIA & NEW ZEALAND

Congratulations on your purchase
and thank you for choosing a Sirius product

THE ALLEGRA

INDUCTION DOWNDRAFT & COOKTOP
INSTALLATION INSTRUCTIONS

SDDH6BR90 9351116006594

www.siriusaustralia.com

062025

CONTENTS

Warnings	3
Before Your Install	6
The Allegra Induction Cooktop & Downdraft	7
Installation	8
Extractor Functions	10
Cooktop Setup	12
Using the Cooktop	15
Cookware Positioning	20
Extractor Wiring	21
Extractor Exploded View & Parts	22
Cooktop Exploded View & Parts	23
Troubleshooting	24
Warranty	25

WARNINGS

The air outlet of the appliance must not be connected to a flue which is used for exhausting other fumes from appliances, such as a central heating, boilers etc..

For the external exhausting of the fumes, comply with the regulations in force.

The motor of the peripheral exhausting group is powered by the cooker-hood placed in the kitchen.

Before connecting the cooker hood to the mains supply, make sure that the voltage indicated in the rating plate corresponds to the mains voltage in the home.

Before carrying out any sort of maintenance or cleaning operation, make sure that the appliance is disconnected from the electrical mains.

An appropriate maintenance ensures a good working and a good performance in the long run.

All models are built in Class I, therefore they must be earthed.

Range hoods and other cooking fume extractors may adversely affect the safe operation of appliances burning gas or other fuels (including those in other rooms) due to back flow of combustion gases. These gases can potentially result in carbon monoxide poisoning. After installation of a range hood or other cooking fume extractor, the operation of flued gas appliances should be tested by a competent person to ensure that back flow of combustion gases does not occur.

If a stationary appliance is not fitted with a supply cord and a plug, or with other means of disconnection from the supply mains, it is necessary to predict a contact separation in all poles that provide full disconnection under over-voltage Category III conditions.

Means for disconnection must be in-governance with local, state and national building regulations fixed wiring in accordance with the wiring rules.

This appliance can be used by children aged from 8 years and above and persons with reduced physical, sensory or mental capabilities or lack of experience and knowledge if they have been given supervision or instruction concerning use of the appliance in a safe way and under stand the hazards involved.

Children shall not play with the appliance.

Cleaning and user maintenance shall not be made by children without supervision.

If the power cable is damaged, it must be replaced by a cable or a special assembly, available from the manufacturer or its service department technique.

Children shall not play with the appliance.

Cleaning and user maintenance shall not be made by children without supervision.

If the power cable is damaged, it must be replaced by a cable or a special assembly, available from the manufacturer or its service department technique.

The room must have adequate ventilation when using the kitchen hood simultaneously with other appliances that use gas or other fuels (not applies to appliances that simply release the air back into the room).

There is the possibility of fire if the cleaning operations are not carried out as indicated in the instructions.

Do not prepare food over open flames as sucked flames are a risk of damage to the appliance.

ATTENTION

The accessible parts can burn if used in conjunction with the cooking appliances.

ABOUT THE ALLEGRA DOWNDRAFT

- This downdraft is designed to work in both ducted mode with outside evacuation, and recirculating mode.
- This appliance is designed for normal domestic use. It is not designed for commercial or industrial use, or for purposes other than those for which it was designed.
- The appliance must be used by adults. Keep the appliance is out of reach of children and always supervise when in use. Children must not operate the controls.
- When the appliance is delivered, check the overall appearance of the packaging. Any remarks should be written on the delivery coupon, of which you keep a copy.
- Any consequences of or damage from incorrect installation or incorrect use of the appliance will not be covered by the manufacturer's guarantee.
- Do not change or try to change the characteristics of this appliance. This would be a danger and will void any warranties.
- Repairs must be performed only by an authorised technician. Always disconnect the hood before carrying out cleaning or maintenance operations.
- Adequately ventilate the room when a cooker hood and other appliances, powered by energy other than electricity, are used simultaneously, so that the hood does not suck any combustion fumes.
- Do not cook food over open flames (flambé) or operate cooktops without pots or pans on them under the hood itself (the flames sucked into the hood might damage the appliance).
- Frying with oil must be done under constant supervision as hot oils and fats may ignite
- Respect the guidelines for cleaning and replacement of grease filters. Accumulated deposits of grease are a fire hazard.
- Never use steam or high-pressure devices for cleaning your hood (regulations regarding electrical safety).
- Never use the rangehood without the grease filters in place.
- The minimum distance between the downdraft and the surface above it must be at least 800mm.
- When handling the downdraft, never put your hands or other objects in the field of action of the unit.
- This appliance may be used by children aged from 8 years old if supervised. Cleaning and user maintenance must not be made by children.
- If the supply cord is damaged, it must be replaced by the manufacturer, its service agent or similarly qualified persons in order to avoid a hazard.
- If the supply cord of the appliance is provided with a cooktop, this must be easily accessible.
- You may also find these instructional materials on our website: www.siriusaustralia.com

WARNING

NEVER try to extinguish a fire with water! Switch off the appliance and cover flame with a fire blanket. If necessary, call the emergency services. Ensure all flames are extinguished.

In the case of the version with external motor, for normal downdraft operation, it is necessary to use an external motor made by Sirius.

It is important to keep these instructions for use with the appliance.

If the appliance should be sold or passed on to others, make sure that the instructions are passed on with it.

We thank you for taking note of these warnings before installing and using the appliance. They have been written for your personal safety and the safety of others.

Emergency Services Australia: 000

Emergency Services New Zealand: 111

ABOUT THE ALLEGRA INDUCTION COOKTOP

- The appliance may be installed and connected to the power supply only by a qualified technician.
- Particular areas of the cooktop surface (adjacent to the induction zones) are hot during operation.
- Hot oil ignites, so be sure to prepare food under constant supervision.
- Induction zones must not be left in operation empty, without any cookware on top.
- Never use the induction cooktop as a working surface. Sharp objects may damage the cooktop.
- Never place any metal objects upon the induction hotplate, such as knives, forks, spoons, pot lids etc as they may get very hot.
- Preparation of food in aluminium or plastic cookware is not allowed. Never place any plastic objects or aluminium foil on the cooktop surface.
- If other appliances are plugged in to the electric mains located close to the cooktop, prevent the plug cable from connecting with the cooking zones.
- Never store any flammable objects or chemicals, like cleaning agents, sprays, detergents, etc below the appliance.
- Never use cracked or broken ceramic glass cooktop. If you notice any visible cracks on the surface, cut the power supply immediately.
- In case of any malfunctions, disconnect the appliance from the power supply and call our service department. DO NOT use the appliance.
- Do not use high-pressure steam cleaners or hot steam to clean the appliance.
- The appliance is manufactured in compliance with the relevant effective safety standards.
- The hob can not be activated by external timers or remote controls systems.
- Be careful not to drop objects or crockery on the induction surface. Even light objects (e.g. a salt shaker) can crack or damage the cooktop.
- If the appliance is situated over an oven with a pyrolytic system, it should not be operated while the pyrolytic process is in progress because it can trigger the overheating protection of the cooktop.
- The flat cable connecting the main wiring assembly to the cooktop must be placed on the rear of the hob, to preserve it from any breakage.
- A distance of at least 15 cm must be left between any object, stored in the same cabinet where the appliance is installed, and the lower part of the induction cooktop. Airflow coming from the cooling system in the lower part of the induction cooktop must not be hindered.
- Don't connect the cooktop to the power supply with an extension cable or multiple sockets.
- After using the cooktop, remove all cookware from the cooking surface. Do not rely on the pot detector.
- Connect the power cable to a permanent connection
- Stationary appliances not fitted with means for disconnection from the supply mains having a contact separation in all poles that provide full disconnection under overvoltage category III, the instructions state that means for disconnection must be incorporated in the fixed wiring in accordance with the wiring rules.
- If the glass is broken, please disconnect not only the supply chain of the cooking appliance but that of the downdraft also.
- If the supply cord is damaged, it must be replaced by the manufacturer, its service agent or similarly qualified persons in order to avoid any kind of hazard.
- You may also find these instructional materials on the website of the manufacturer.

WARNING

Unattended cooking on a cooktop with fat or oil can be dangerous and may result in fire.

NEVER try to extinguish a fire with water! Switch off the appliance and cover flame with a lid or a fire blanket. If necessary, call the emergency services. Ensure all flames are extinguished.

WARNING

Fire danger: Do not store items on the cooking surfaces.

BEFORE YOU INSTALL - USEFUL DUCTING INFORMATION

Sirius warranty covers only Sirius product. If you choose to install a non-Sirius branded accessory such as flexible ducting, Sirius will only warrant the rangehood and motor. If installation is found to be the cause of failure or issue then charges will apply for service and parts.

Flexible ducting is not permitted under any circumstances. Flexible ducting has been found to increase noise levels, increase vibration and reduce airflow. Sirius Semi-rigid or solid ducting can be used in lieu. There is a range available to suit any application.

WARNING

The appliance must be installed and connected to the power supply only by a qualified technician.

- There should be adequate ventilation of the room when the rangehood is used at the same time as appliances burning gas or other fuels (not applicable to appliances that only discharge the air back into the room)
- The details concerning the method and frequency of cleaning
- There is a fire risk if cleaning is not carried out in accordance with the instructions
- Do not flambé under the range hood
- CAUTION: Accessible parts may become hot when used with cooking appliances

Ducting available at www.siriusaustralia.com
6 Year Warranty when Sirius Ducting is used. Full replacement warranty on parts and labour.
See website for terms & conditions.
A reduction in the duct diameter from stated ducting size will void warranty.
If you are in doubt about the ducting, please contact Sirius on 1300 762 219 prior to installation

The symbol on the product or on its packaging indicates that this product may not be treated as household waste. Instead it shall be handed over to the applicable collection point for the recycling of electrical and electronic equipment. By ensuring this product is disposed of correctly, you will help prevent potential negative consequences for the environment and human health, which could otherwise be caused by inappropriate waste handling of this product. For more detailed information about recycling of this product, please contact your local city office, your household waste disposal service or the shop where you purchased the product. This appliance is marked according to the European directive 2/96/EC on waste electrical and electronic equipment (WEEE).

THE ALLEGRA
INDUCTION COOKTOP & DOWNDRAFT

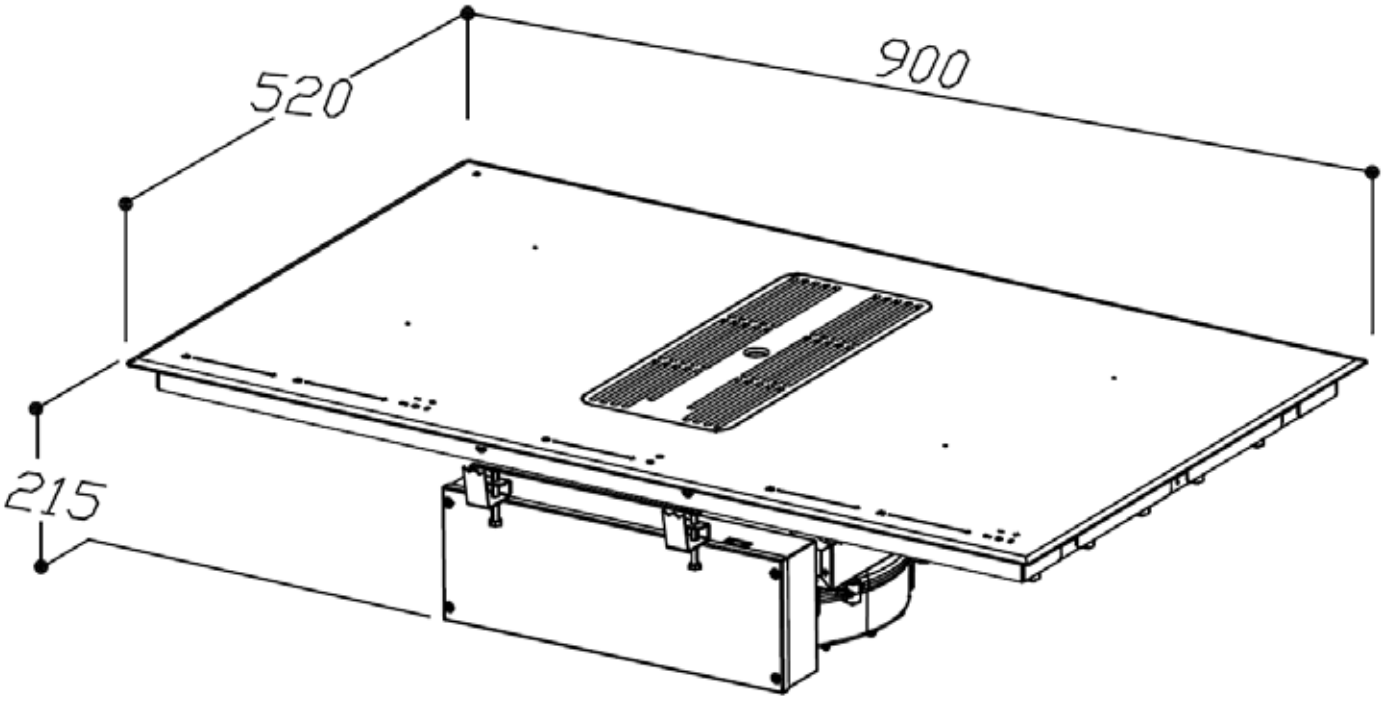

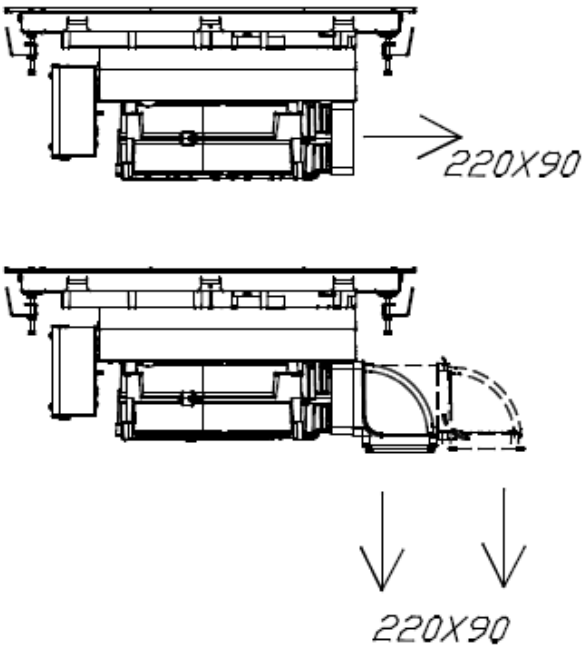

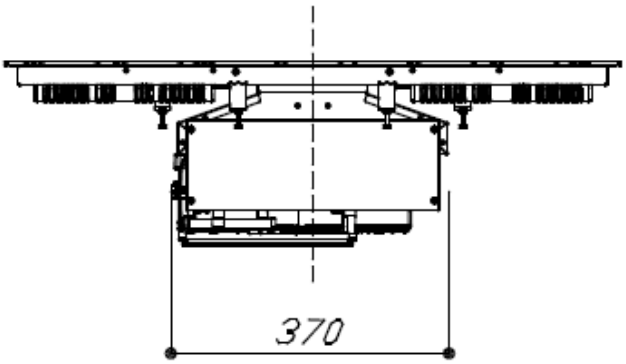

INSTALLATION

Before installing the appliance, make sure that none of the parts are damaged in any way. In case of damaged parts, contact your retailer and do not proceed with installation. Read all of the following instructions with care before installing the appliance.

- Use ducting within the min/max specifications
- Use ducting of the shortest possible length
- Limit the number of ducting bends
- Only use materials approved by standards and regulations
- Do not make any changes in ducting diameter (recommended constant diameter: Ø 150 mm / Ø 200 mm or equal surface area).

The appliance must be installed by qualified technicians, or where possible use a Sirius recommended installer. See siriusaustralia.com.

In order to avoid damage to the electronic parts of the appliance, please do not use additional screws.

Before any installation operation is carried out, make sure that the appliance is disconnected from power supply.

RECIRCULATION OPERATIONS

The air outlet of the product must be connected to the opening in the cabinet so as to recirculate the exhausted air in the kitchen. See Fig.1

Recirculating filters, to be purchased separately, are required in this configuration. They must be installed as shown in Fig.3. Recirculating filters are located right under the grease filters, so they must be installed before the grease filters. A ducting kit with grill (on the end to be installed in the cabinet) is also available for separate purchase.

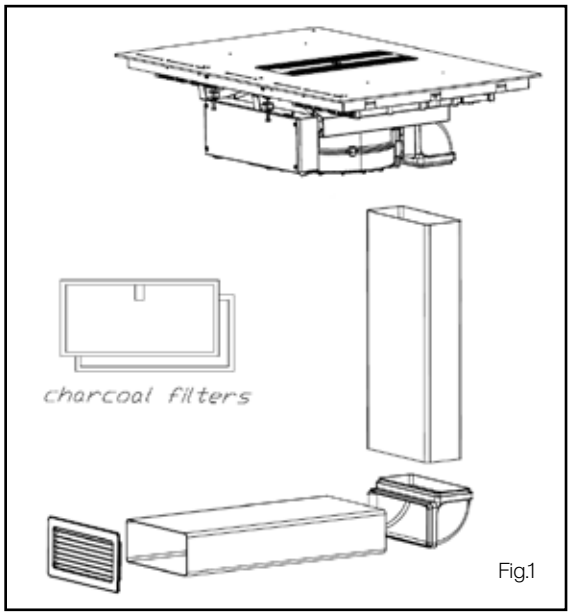

Fig.1

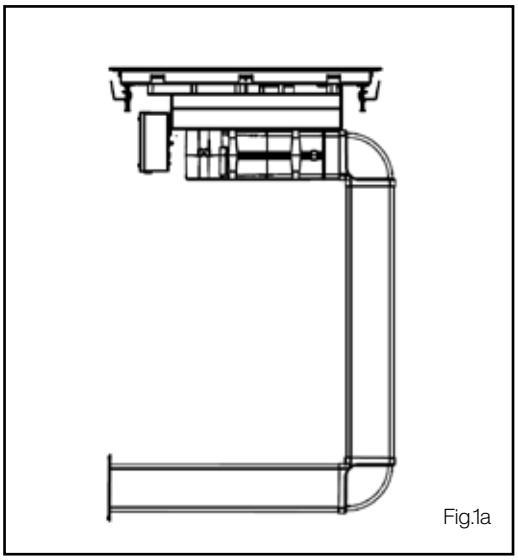
Fig.1a

DUCTING OPERATIONS

The air outlet of the product must be connected to the outside of the house. The ducting to be installed from the air outlet of the product to the outside of the house is not provided with the appliance. The product is equipped with plastic flanges, to connect ducts of sections 220x90 mm. See Fig.2

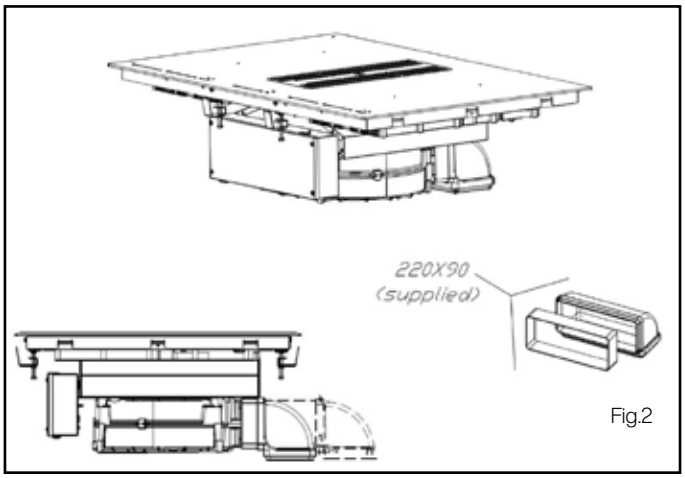

Fig.2

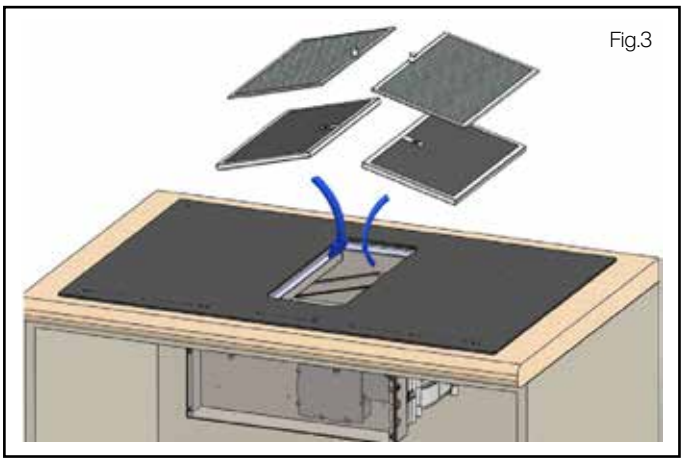

FINAL OPERATIONS

Install the grease filters in the specific seat, letting them through the central opening of the cooktop, see Fig.4

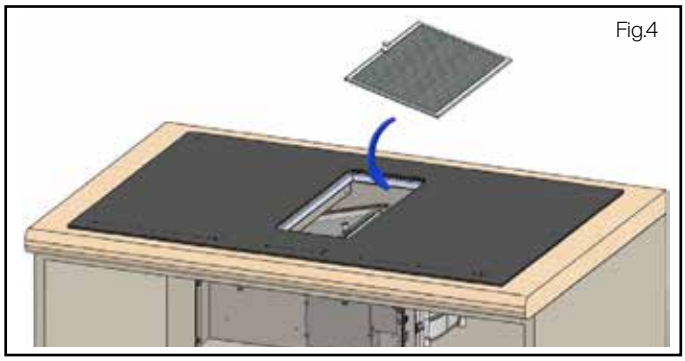

To close the central opening of the cooktop, place the metal grill on top of it, as shown in Fig.5

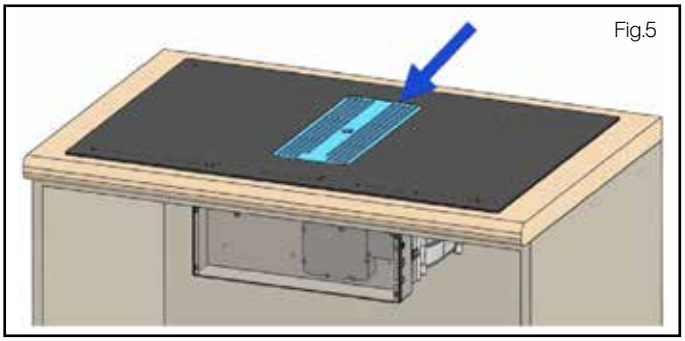

ELECTRICAL CONNECTIONS

The connection of the product to the power supply must be carried out in compliance with the international and local regulations in force. The interconnection of any separate part of this appliance must be carried out by a qualified technician in compliance with the wiring regulations.

The connection to the power supply must be by means of a plug and it can also be done by the end user.

Any liability in case of accidents caused by failure to arrange the earth connection or failure to arrange it correctly is hereby declined.

DUCTING CONNECTIONS

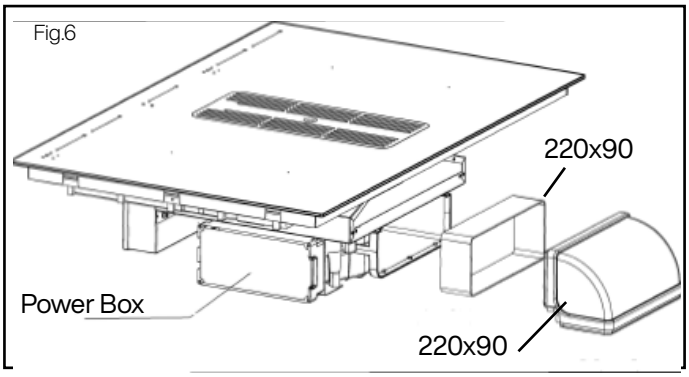

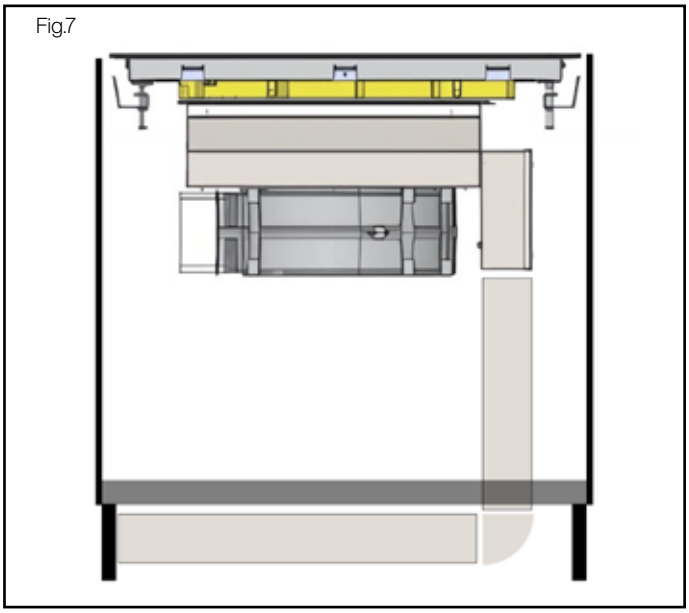

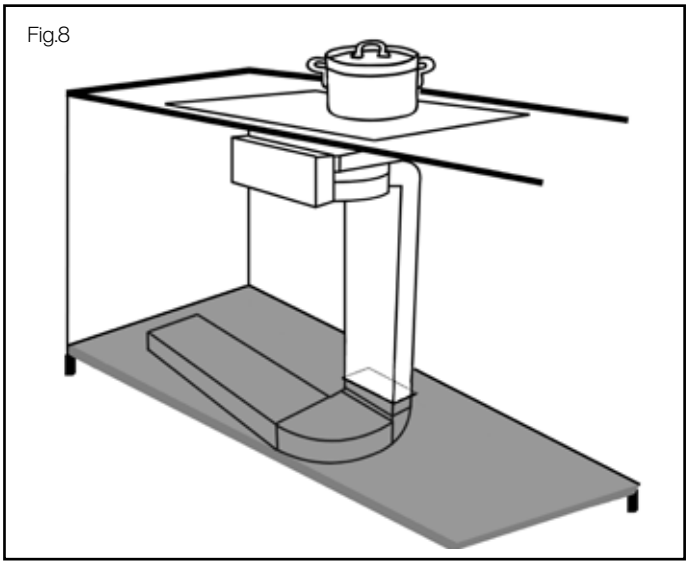

Extra Ducting Components

With Sirius' extra ducting components, you can duct your rangehood in a way that best suits your setup - under the kicker, through the wall, recirculated, left, right or back. See Fig.9.

With extension pieces, angeled connectors and rectangular to round adapters availble. View the range at www.siriusaustralia.com

Extender

Horizontal Connector

Vertical Connector

Round to Rectangular Adaptor

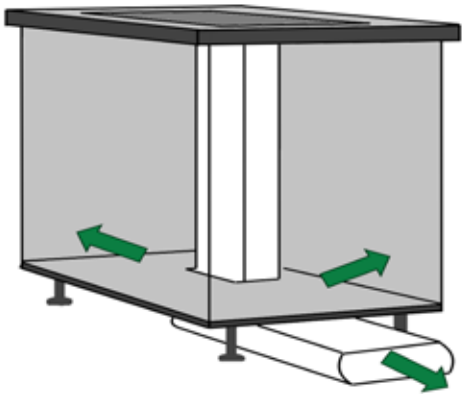

Fig.9

EXTRACTOR FUNCTIONS

A ON/OFF switch. It allows to turn on the product and it automatically sets it on the second speed. When the appliance is on, on any speed level, this turns off the blower.

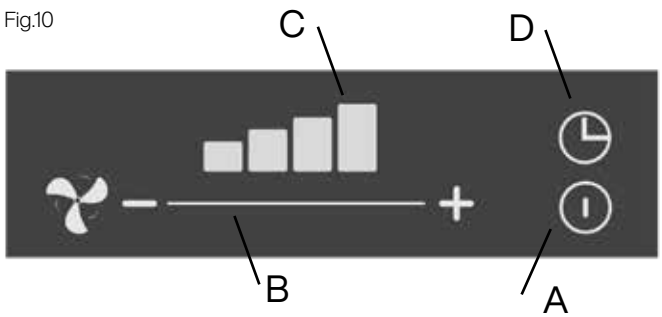

Fig.10

B Linear touch control that allows to change the blower speed. It is not possible to turn off the blower by means of these controls. It is not possible to select a speed level unless the product has been turned on using the ON/OFF key.

C LED indicators, showing what blower speed has been set.

D 10 minutes after this key has been touched, the blower stops itself. When this function is on, it is signaled by the blinking of the "C" LED, according to the speed that has been set.

Automatic switch off:

After 4 hours of uninterrupted operation, or after 4 hours since the last key has been touched, the appliance turns off automatically.

Grease filters saturation:

After 30 hours of operation, all speed indicators blink simultaneously (Fig. 10C), to signal the saturation of the grease filters. By holding the TIMER key for at least three seconds when the product is turned off, the alarm goes off and it is reset.

EXTRACTOR CLEANING AND MAINTENANCE

- Before carrying out any cleaning or maintenance operation, the appliance must always be disconnected from power supply.
- Should the power cord endure any damages, it can only be replaced by after-sales service or by an experienced professional.
- Do not try to modify or repair the appliance, as this might entail great danger. Service or repair operations must be carried out by an experienced professional.
- Cleaning and maintenance operations must not be carried out by children.
- Accurate maintenance assures proper function and good performances of the appliance over time.
- The grease filter can be cleaned either by hand washing or in the dishwasher.
- Filters cleaning occurs according to the use, but at least once every two months.
- Frequently washing the black grease filters in the dishwasher could compromise the aesthetic finish of the product.
- Dependant on use, the recirculating filters should be replaced at least every six months.
- Tepid water and mild soap are recommended while cleaning the appliance. Abrasive products must be avoided.

ATTENTION IMPORTANT NOTE:

DO NOT USE THE DISHWASHER TO CLEAN THE METALLIC GRID

In case of presence of liquid inside the product, it can be removed through the cap positioned under the body of the hood. See Fig.11

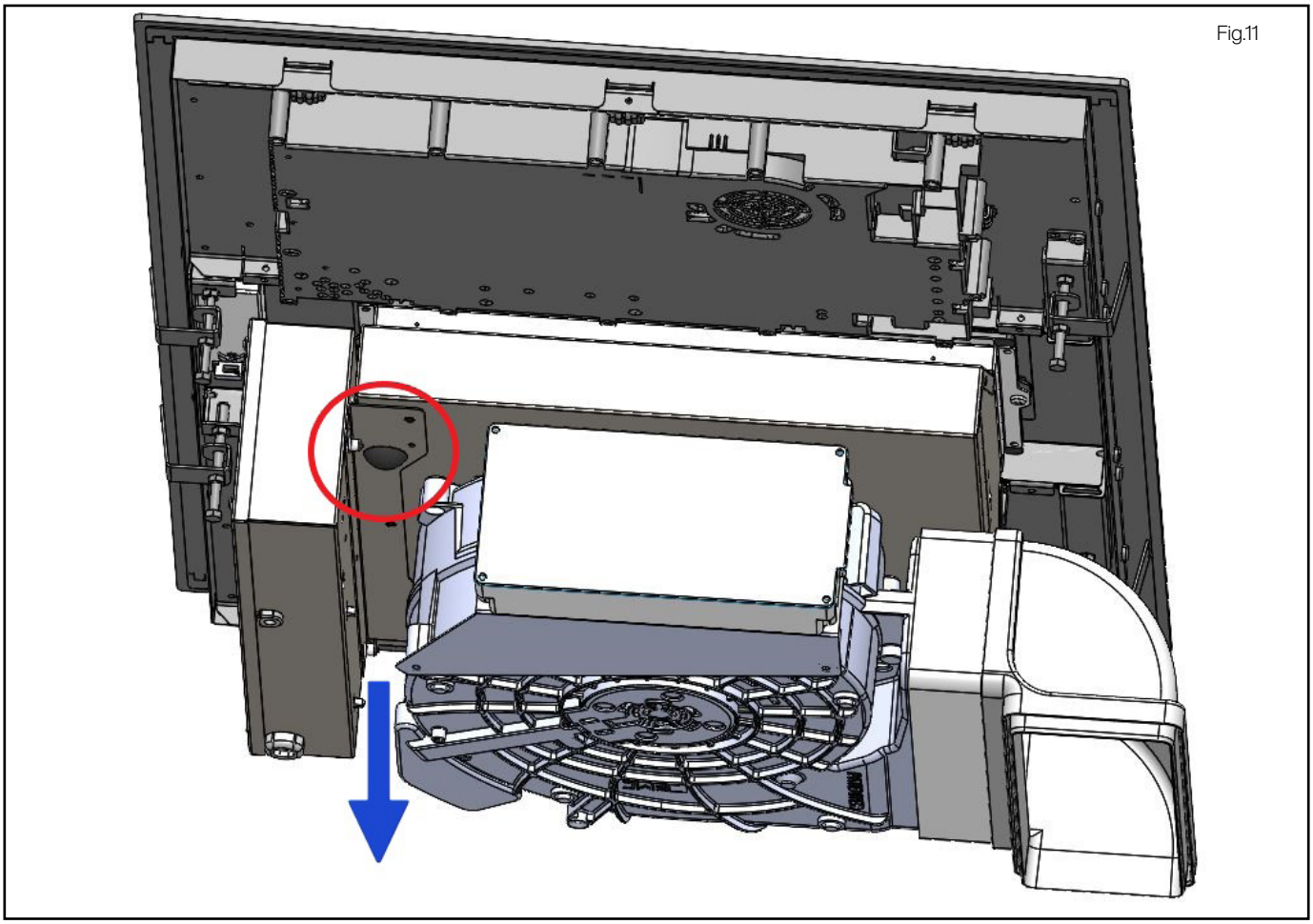

Fig.11

COOKTOP SETUP

These instructions are for a specialised installer and are a guide for the installation process, regulations and maintenance in accordance with the law and current standards.

POSITIONING

The domestic appliance was built in order to be encased on a work surface, see Fig.12 and Fig.13.

Predispose sealing material (Fig.14) along the whole perimeter. Insert the appliance into the recessed hole by pushing it down (Fig.15). The springs mounted on the bottom will ensure the correct positioning on the top.

We do not recommend the use of the product over other appliances. This is mainly due humidity and/ or heat reasons. If the end user wants to do so, we suggest to use a spacer between the appliance and the cooktop. There should be a gap of minimum 2cm from the fans. The cooktop needs to get fresh air from the back of the kitchen and release warm air from the front.

VENTILATION

The distance between the cooktop and built-in kitchen's furnitures or cooking apparatuses must guarantee sufficient ventilation of the air (Fig.16). Not to use the cooktop if in the oven is in course the pyrolysis process.

ELECTRICAL CONNECTIONS (Fig.17)

Before making the electrical connections, check that:

- the system ratings meet the ratings indicated on the identification plate fixed on the lower part of the worktop;

- the system is fitted with efficient ground wires in accordance with the laws and current standards.

GROUNDING IS MANDATORY BY LAW.

ATTENTION: The earth cable must be left longer than the other cables, so that it is the last to be pulled in case of failure of the anchoring system.

For the electrical connection it is necessary to open the plastic box (Fig.18) and follow the instructions on the adhesive plate located both on the lid of the box itself, on the product and in this manual (Fig.17). Use a (3G4) section cable (not supplied with the appliance) of the H05V2V2-F <HAR> type and connect the conductors as indicated in Fig.17.

ATTENTION: If the power cord is damaged, it must be replaced by manufacturer, by its service agent or by persons qualified to avoid dangers.

If wishing to make a direct connection to the mains, an omnipolar switch must be installed with a minimum 3mm opening between the contacts and appropriate for the load indicated on the plate and in accordance with current standards (the yellow/green ground conductor must not be disconnected by a switch).

Connection of the product to the power supply and the external disconnecting device must comply with the AS/NZS 3000 standard (National standard for electrical systems)

Proud Installation

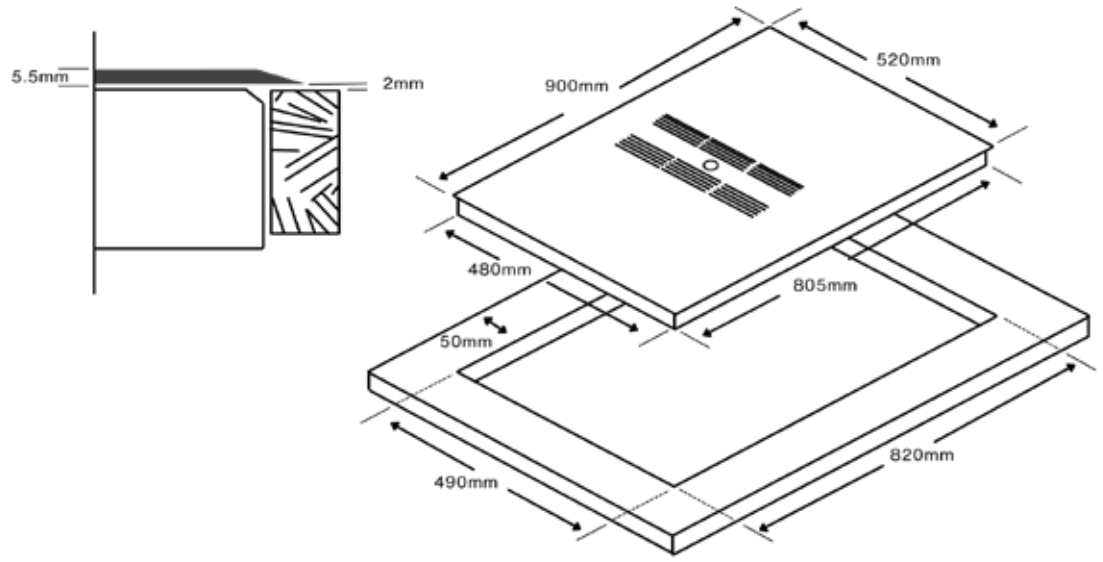

Fig.12

Recessed Installation

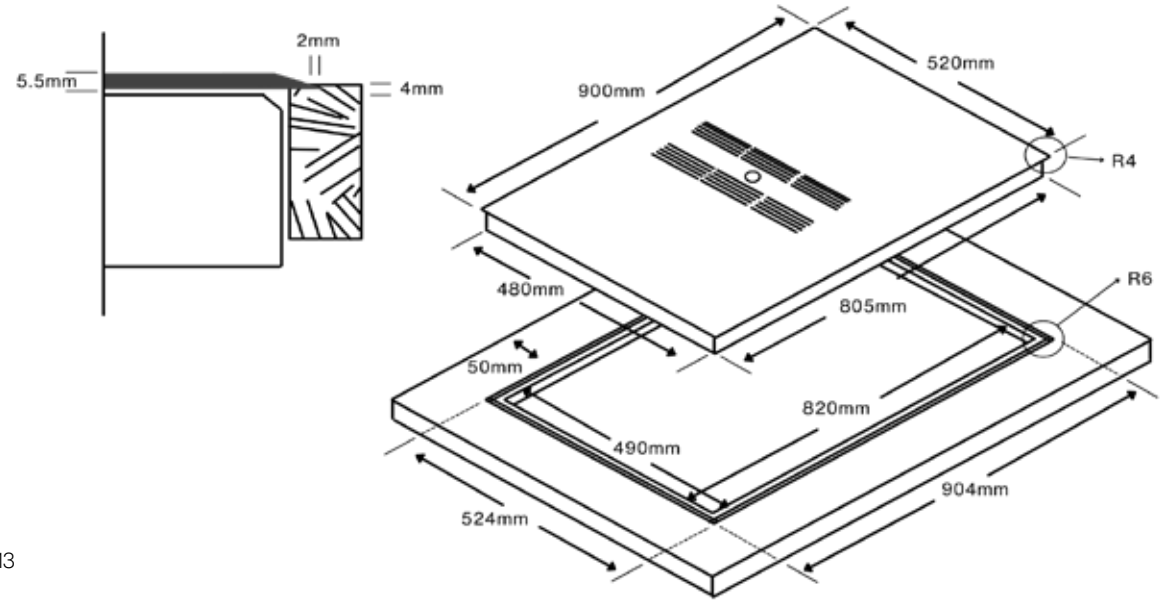

Fig.13

Sealing

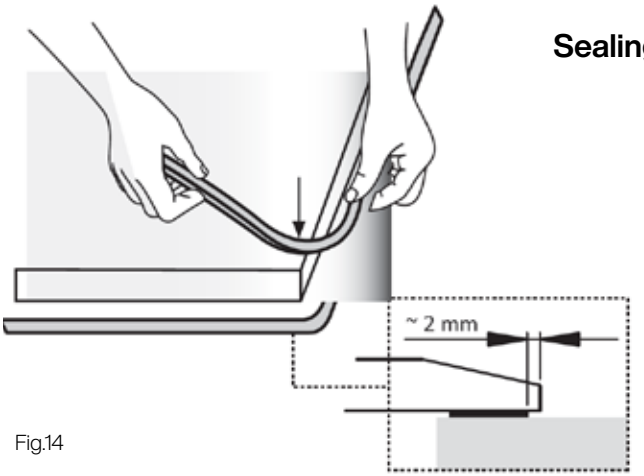

Fig.14

Ventilation Requirements

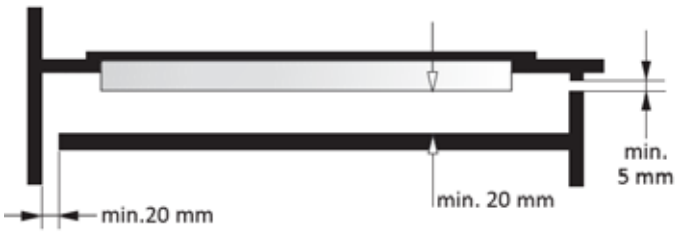

Fig.16

Inserting the Cooktop

Fig.15

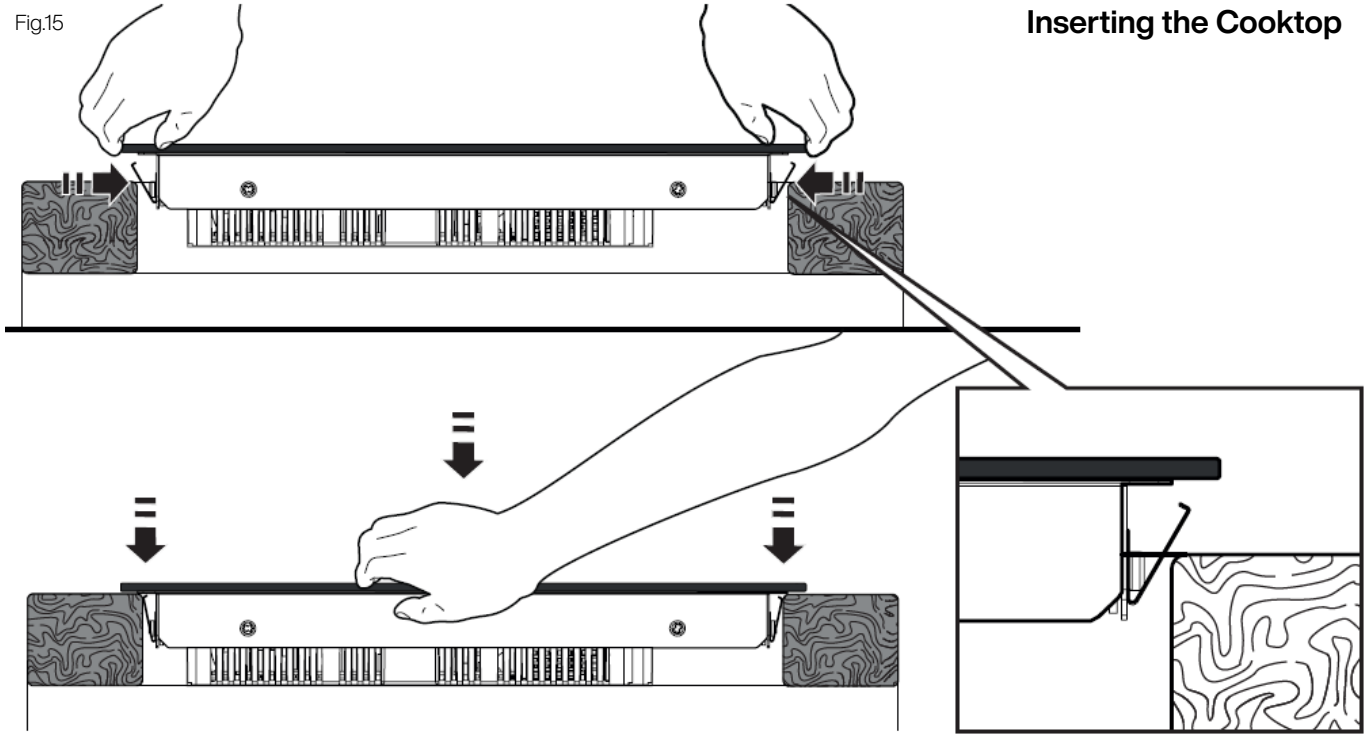

Fig.17

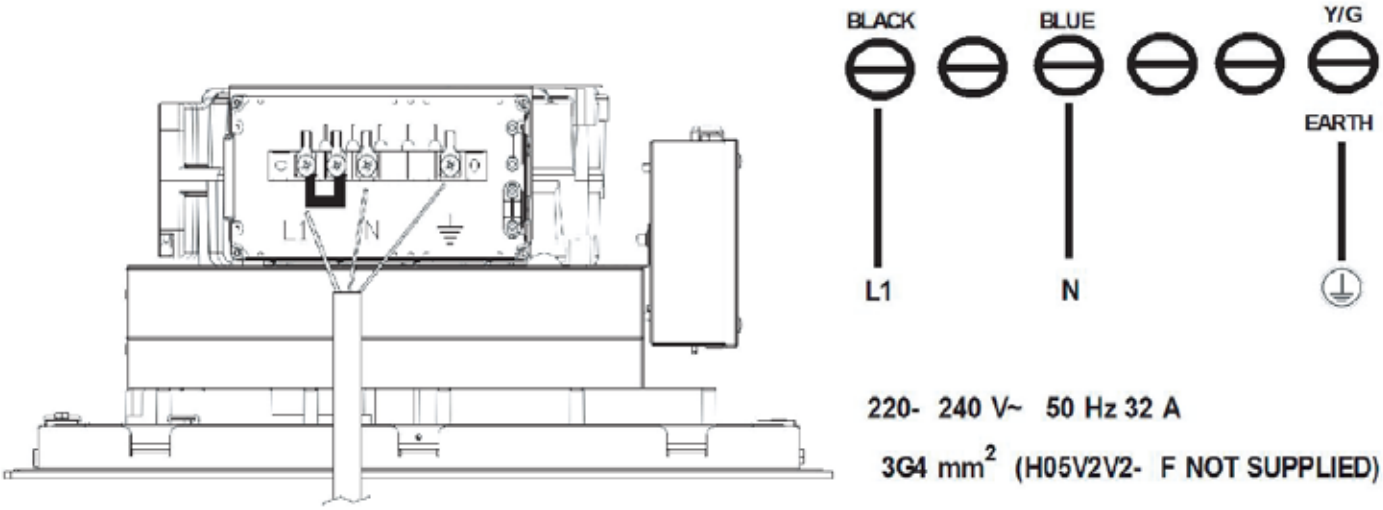
BLACK
BLUE
Y/G
EARTH
L1
N
L1
N
220- 240 V~ 50 Hz 32 A
3G4 mm2 (H05V2V2- F NOT SUPPLIED)

Fig.18

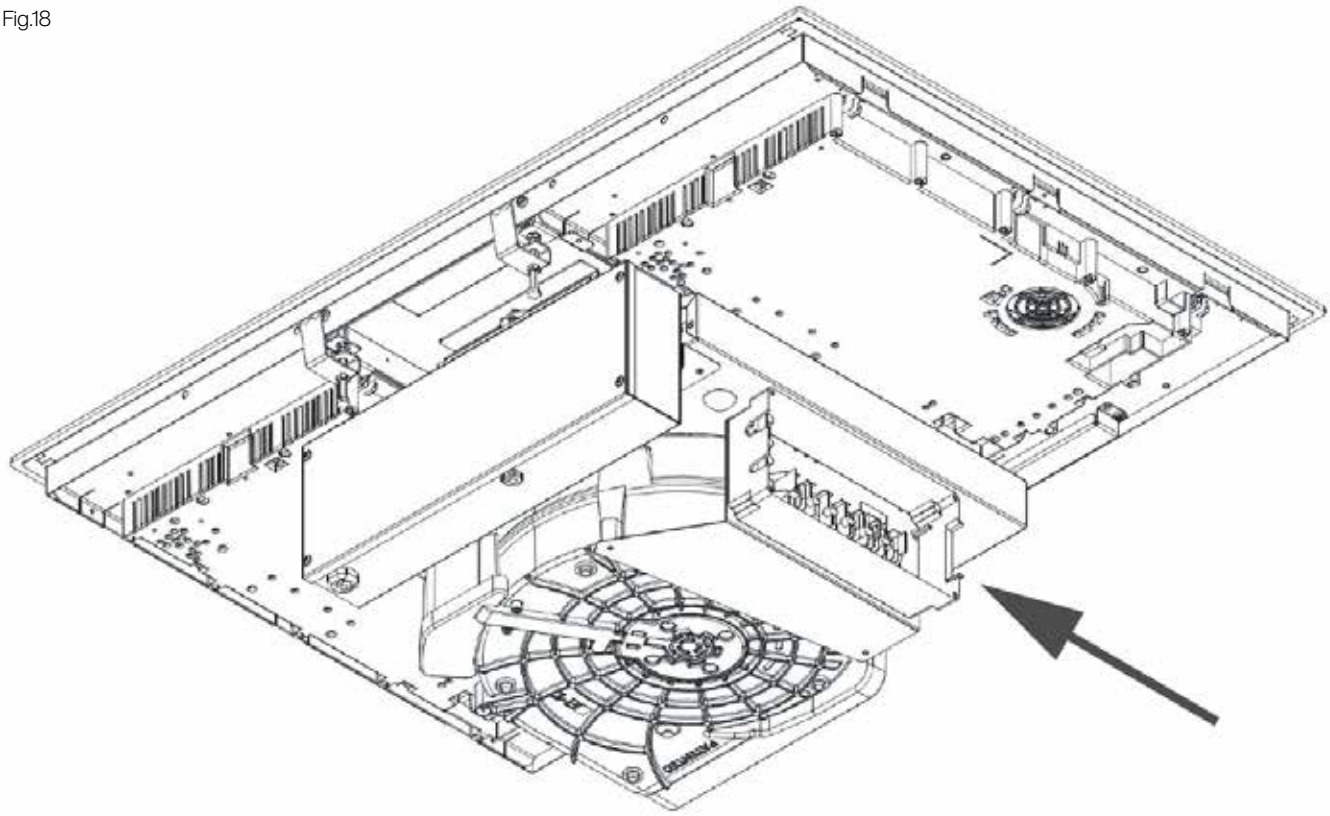

USING THE COOKTOP

INDUCTION COOKING

The fundamental characteristic of the induction system is the direct transference of heat from the generator to the cooking recipient.

- The transference of power takes place only when the recipient is placed on the cooking zone.

- The heat is generated only at the base of the recipient and transferred directly to the food to be cooked.

- Reduced heating time and low consumption of power during the beginning of cooking, allowing a global saving of power.

- The fibreglass top remains cold, the heat felt on the cooking top is that reflected from the base of the recipient.

COOKING WARES

- The use of appropriate cooking wares is an essential factor for induction cooking. Check that your pots and pans are suitable for the induction system. Only ferromagnetic cookware made of the following materials is suitable for induction cooktops:

- Enameled steel with magnetic bottom

- Cast iron

- Induction-capable cookware of stainless steel.

To see if the cooking wares are suitable, check that they are attracted by a magnet. (Fig.19). There are some special induction cookware on the market whose bottoms are not totally ferromagnetic. To obtain good cooking suitability, we suggest you to use pots whose ferromagnetic zone has the same dimensions as the pot. We recommend flat bottom containers (Fig.19a). Do not use vessels with a rough base, to avoid scratching the thermal surface of the top. A significant factor in induction cooking is the size of the pot in relation to the plate used (Fig.22/23).

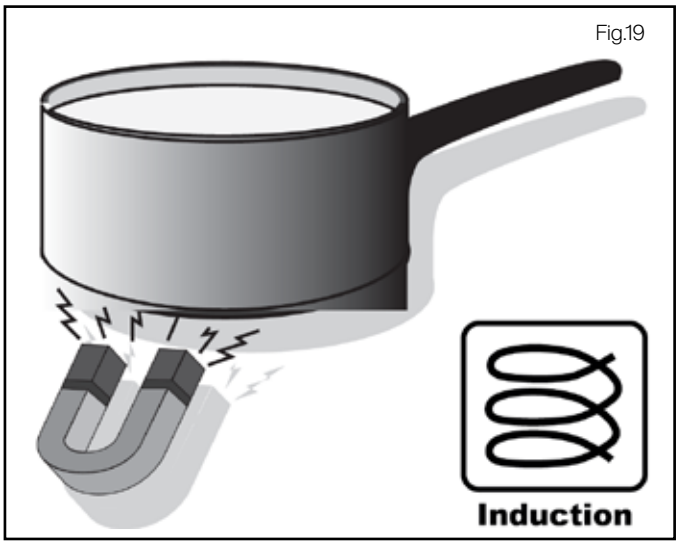

Fig.19

The cooking zones allow the use of containers with bottoms of various diameters. It is however preferable to use the cooking zone appropriate to the diameter of the pot you want to use.

USING THE COOKTOP

The appliance is operated using the control panel sensor keys. Functions are controlled by touching the sensor keys and confirmed by displays and acoustic signals. Touch the sensor keys from above, without covering other sensor keys.

SWITCHING THE APPLIANCE ON

Press the On-Off key to switch the hob on. All the displays relative to the cooking zones switch on in the «0» standby position.

The control unit remains active for 10 seconds. If no cooking zone is selected within this time, the appliance switches off automatically.

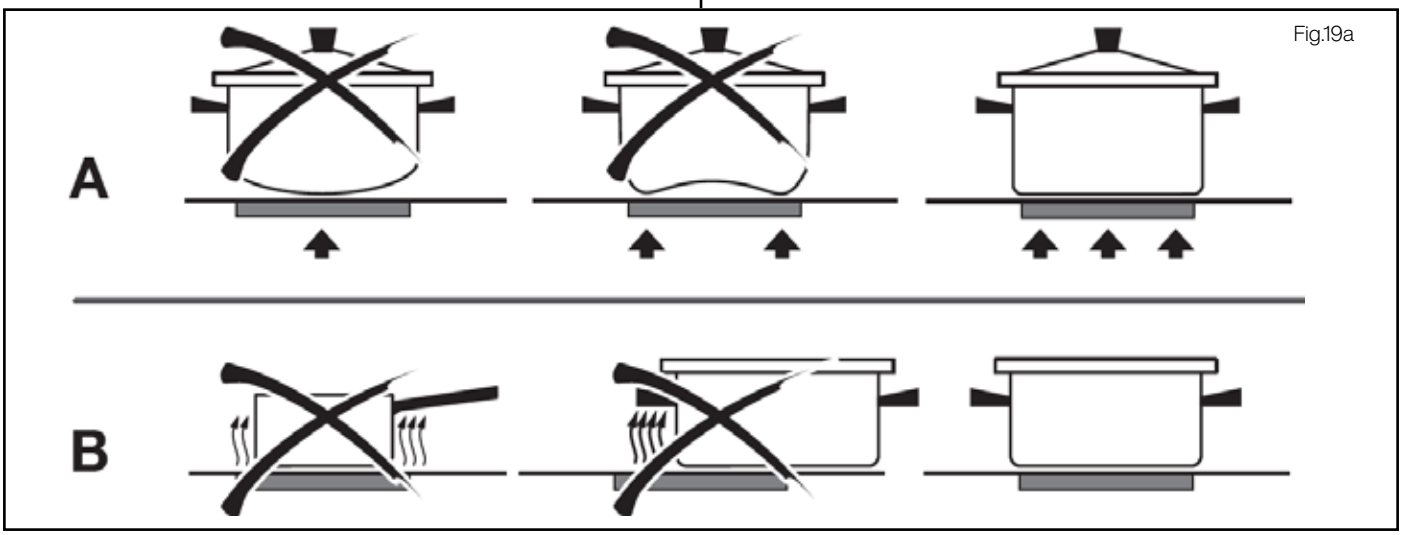

Fig.19a

Fig.20

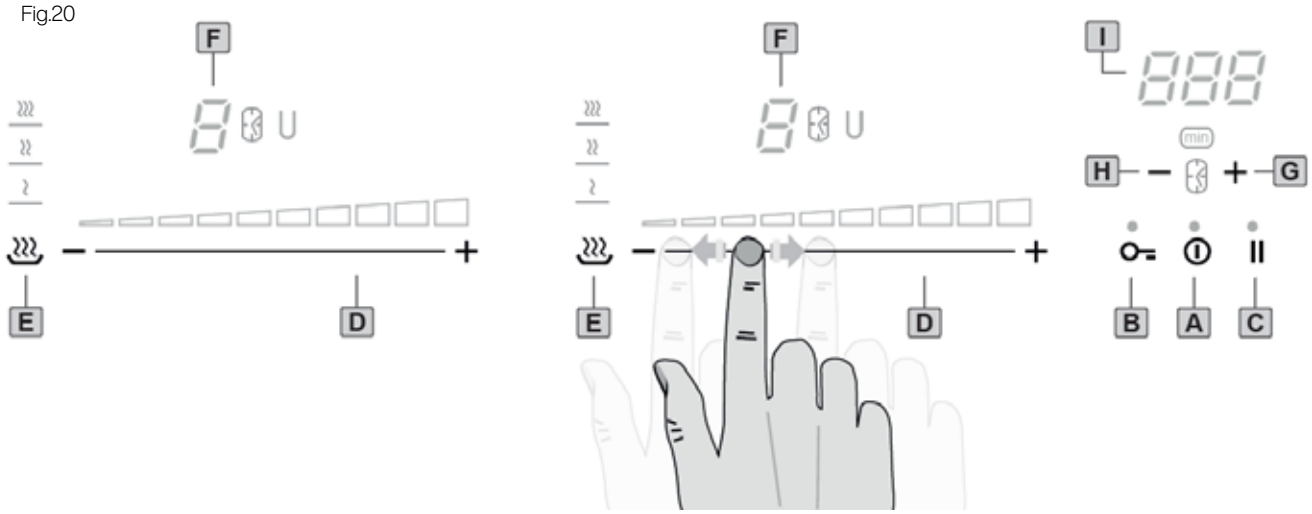

A	On/Off Key	D	Cooking Zone Slidebar	G	Timer [+] Key
B	Lock Key	E	Programs Key	H	Timer [-] Key
C	Pause Key	F	Cooking Zone Display	I	Timer Display

SWITCHING A COOKING ZONE ON

Select the desired cooking zone and press or slide on the corresponding slidebar (D). The power of the single cooking zone can be adjusted in 9 different positions and will be shown on the relative luminous display with a level from «1» to «9».

Slide right on the slidebar to increase the power level, slide left to decrease it.

BRIDGE (Flexible cooking zones) U-∩

This function allows you to combine the front cooking zone to the rear cooking zone to create one large zone (zone 1+2 and 3+4).

Pay attention in lacing the cookware in the correct position on the cooking zones. To activate the Bridge function press simultaneously on both Sliderbars of the two adjacent cooking zones.

The bridge luminous symbol U/∩ will appear on the side of the two cooking zones display indicating that the function is active. Now it is possible to set the heat level of the bridge zone. NOTE: the settings of the bridge zone are only enabled by the front cooking zone slidebar and sensor keys.

To disable the Bridge function press simultaneously on both Sliderbars of the two adjacent cooking zones. The bridge luminous symbol «U»/«∩» turns off.

POT DETECTION « U »

Each induction cooking zone has a pot detection minimum limit, which varies according to the material of the cookware being used. For this reason, you should choose the cooking zone which is most suitable for the diameter of the cookware you are going to use. If the symbol « U », appears on the cooking zone display, it means that:

- The cookware used is not suitable for induction cooking.
- The cookware diameter is smaller than the one allowed by the hob.
- No cookware is on the cooking zone.

RESIDUAL HEAT « H »

If the temperature of the cooking zone is still high (over 50°C) after it has been switched off, the relative display will indicate the symbol « H » (residual heat). The symbol will stay on even when the appliance is switched off and will only switch off when the burn risk in no longer present.

POWER BOOST (quick heating) « **P** »

This program further reduces the cooking time of a certain cooking zone, by bringing the temperature to the maximum heat level for 10 minutes. At the end of this timeframe, the cooking zone heat level will automatically go back to level «9». The use of this function is recommended for heating large quantities of liquids (e.g. water to cook pasta) or food in a very short time. To activate this program slide to the far right on the slidebar until the «P» symbol appears on the cooking zone display.

AUTOMATIC WARM-UP « A »

All cooking zones are equipped with an “automatic warm up” function. This feature sets the cooking zone to the highest heat level for a certain period of time and then automatically switches back to the cooking setting that was originally set.

The length of time that the automatic warm up function operates depends on the heat setting selected.

To activate the “automatic warm up” function on a cooking zone place your finger on the slidebar at the desired heat level an hold the position for 3 seconds until the symbol «**A**», alternating with the selected heat level, appears on the cooking area display.

SPECIAL PROGRAMS

The cooktop has three special programs that have already been set to perform special cooking operations.

Warming

The “Warming” program sets the heat temperature of the selected cooking zone at 42°C to keep food warm. To activate this program press the Special programs key once. The Warming led lights up besides the cooking zone display.

Melt

The “Melt” program sets the heat temperature of the selected cooking zone at 70°C to melt chocolate, butter or the like. To activate this program press the Programs key twice. The Melt led lights up besides the cooking zone display.

Simmer

The “Simmer” program sets the heat temperature of the selected cooking zone at 94°C to bring to a boil slowly preparing sauces or soups and stews. To activate this program press three times the Programs key, the Simmer led lights up besides the cooking zone display.

TIMER

This function allows you to set the time from «1.00» (1 minute) to «1.59» (1 hour and 59 minutes) for the automatic switch off of a cooking zone.

Switch on a cooking zone by sliding on the slidebar to adjust the heat level. To activate the timer press simultaneously the [+] and [-] keys on the timer area until the clock symbol lights up beside the cooking zone display, then set the desired time using the timer [+] and [-] keys within 5 seconds. Wait for 5 seconds for the automatic confirmation. The time countdown To disable the timer of a cooking zone press

will be start on the timer display.

When time elapses the cooking zone will automatically switch off, the timer display will show a flashing «000» and an acoustic signal will be heard. Press the [+] or [-] key on the timer area to stop the signals.

To disable the timer of a cooking zone press repeatedly and simultaneously the [+] and [-] keys on the timer area until the clock symbol lights up beside the display of the desired cooking zone, press again the timer [+] and [-] keys simultaneously, then bring the timer value back to «000» by using the timer [-] key. Wait for 5 seconds for the automatic confirmation. The clock symbol beside the cooking zone display goes off.

EGG TIMER

When no cooking zone is active it is possible to set an acoustic reminder which stays active after switching the appliance off. When the Egg timer/reminder function is active, the Timer function cannot be selected.

To enable this function press simultaneously the timer [+] and [-] keys. The clock symbol lights up below the timer display. Set the time, ranging from «1.00» (1 minute) to «1.59» (1 hour and 59 minutes), by pressing the [+] and [-] keys. Wait for 5 seconds for the automatic confirmation. The time countdown will be shown on the timer display.

When time elapses the display will show a flashing «000» and an acoustic signal will be heard. Press the [+] or [-] key on the timer area to stop the signals.

To disable the Egg timer/Reminder function press simultaneously the timer [+] and [-] keys. The clock symbol lights up below the timer display. Bring the timer value back to «000» by using the [-] key. Wait for 5 seconds for the automatic confirmation. The clock symbol beside the timer display goes off.

PAUSE « **II** »

When at least one cooking zone is operating it is possible to momentarily pause the appliance switching off the cooking zones.

To enable this function press the Pause key. The relative led lights up and all the cooking zone displays show the symbol «II». Previously programmed timers will be stopped. The pause can last for maximum 10 minutes. If this status is not terminated within this time the appliance switches off.

To disable the Pause function press the Pause key and slide right on the flashing slidebar within 10 seconds.

RECALL

When the appliance has been switched off by mistake it is possible to quickly recall the previously active settings by pressing the On-Off key within 6 seconds, then pressing the Pause key within another 6 seconds. If the recall function is available the relative led will be flashing when the appliance is switched on again.

CONTROL LOCK

Controls can be locked in order to prevent any risk of unintentional changes to the settings (children, cleaning operations, etc.). To activate this function press the Lock key. The relative led will light up. The function remains active when the appliance is switched off and on again. To disable the Control Lock function simply press the Lock key. The relative led will go off.

CHILD SAFETY LOCK « L »

This function serves the purpose of preventing children from switching on the appliance even accidentally or intentionally.

The Child safety lock can only be activated within 10 seconds from the switching on of the appliance, with all the cooking zones off.

To activate this function press simultaneously the Lock key and the Pause key, then again the Control Lock key. The symbol «L» will appear on all displays to confirm your selection and the relative led will light up.

When the Child safety lock is enabled you can switch the appliance off. The Child safety lock is still enabled when the appliance is switched on again.

To unlock the appliance temporarily press simultaneously the Lock key and the Pause key. In this case the Child safety lock will still be active each time the appliance is switched on again. To unlock the appliance permanently, press simultaneously the Lock key and the Pause key, then again the Pause key. In this case the Child safety lock won't be enabled when the appliance is switched on again.

SWITCHING A COOKING ZONE OFF

To switch a cooking zone off bring its level back to «0» by sliding left on the corresponding slidebar.

SWITCHING THE APPLIANCE OFF

To turn off the cooking top entirely hold down the On-Off key.

SAFETY SWITCH

The appliance has a safety switch that automatically switches off the cooking zones when they have been operating for a certain amount of time at a given power level.

Power Level	Operating Time Limit (hrs)
1-2	6
3-4	5
5	4
6-7/8-9	1.5

POWER MANAGEMENT

All cooking zones are connected to one phase. The phase has a maximum electricity loading of 3700 W / 230V (Fig.20).

The function divides the heat level between cooking zones and activates when the total electricity loading of the cooking zones exceeds 3700 W. The function decreases the heat level to the other cooking zones.

The heat setting display of the reduced zones changes between two levels.

CLEANING AND MAINTENANCE

Remove any residues of food and drops of grease from the cooking surface by using the special scraper supplied on request.

Clean the heated area as thoroughly as possible using suitable products, and a cloth/paper, then rinse with water and dry with a clean cloth.

Using the special scraper immediately remove any fragments of aluminium and plastic material that have unintentionally melted on the heated cooking area, or residues of sugar or food with a high sugar content.

In this way, any damage to the cooktop surface can be prevented. Under no circumstances should abrasive sponges, or corrosive chemical detergents, such as oven sprays or stain removers, be used.

WARNING: STEAM CLEANERS MUST NOT BE USED.

Fig.21

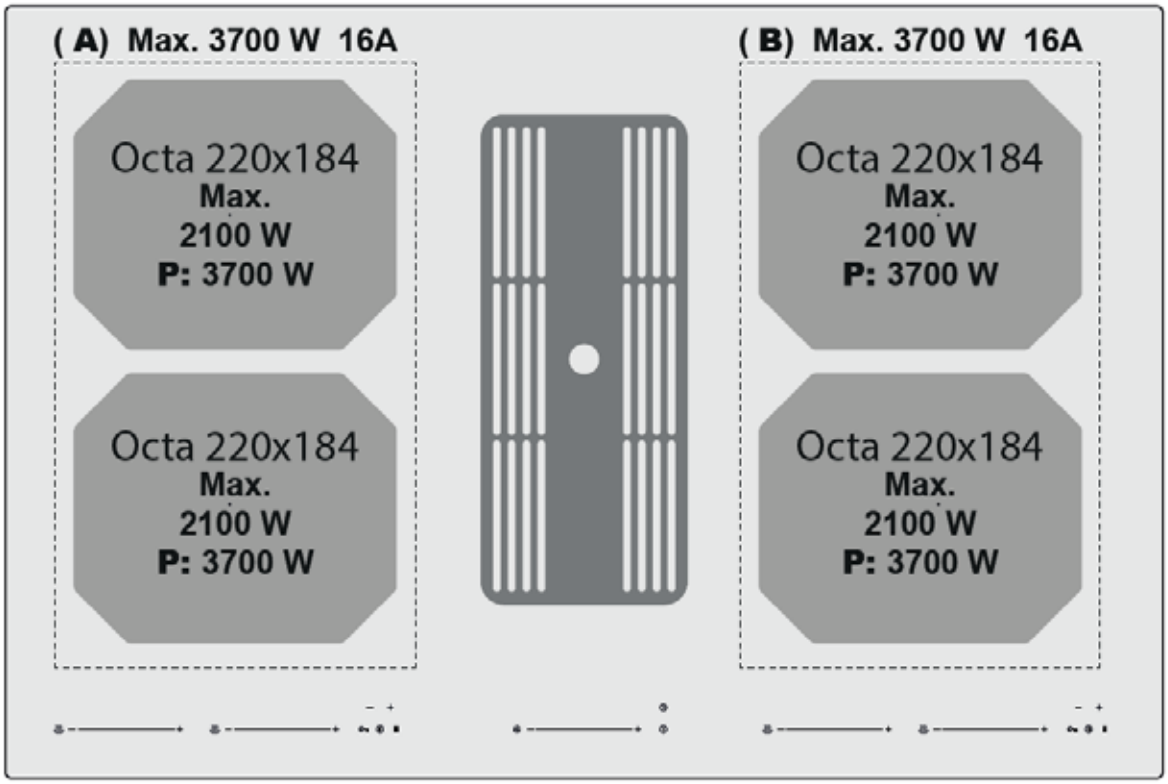
(A) Max. 3700 W 16A
Octa 220x184
Max.
2100 W
P: 3700 W
Octa 220x184
Max.
2100 W
P: 3700 W
(B) Max. 3700 W 16A
Octa 220x184
Max.
2100 W
P: 3700 W
Octa 220x184
Max.
2100 W
P: 3700 W

Fig.22

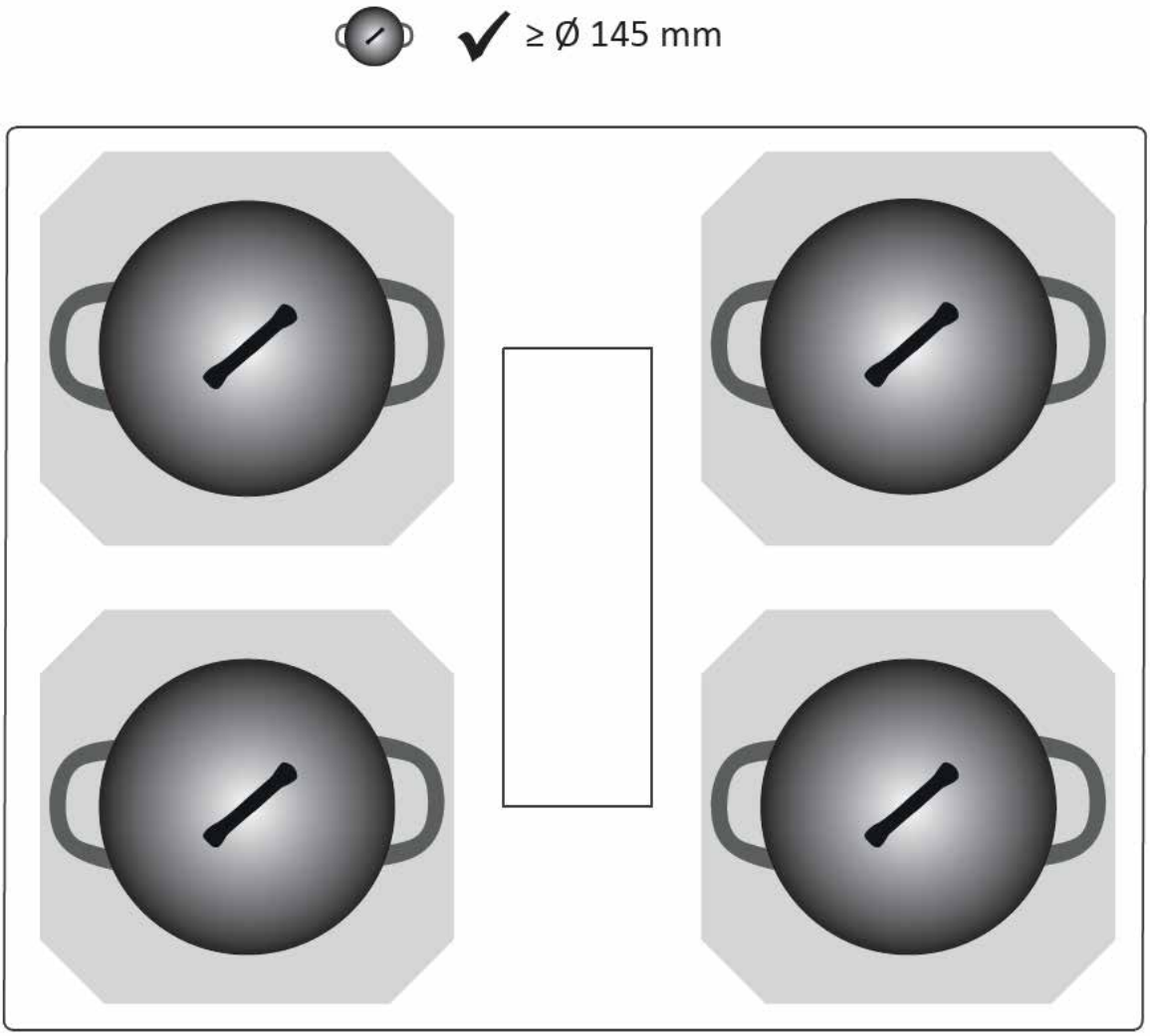
≥ Ø 145 mm

CORRECT COOKWARE POSITIONING

Fig.23

INCORRECT

Cookware not centered on Cooking Zone surface

Curved or warped pan bottoms or sides.

Pan does not meet the minimum size required for the Cooking Zone.

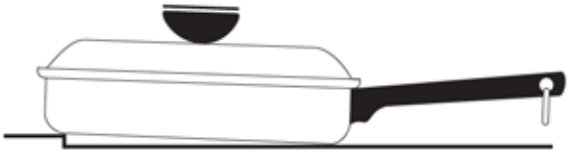

The pot does not completely rest on the Cooking Zone.

Heavy handle tilts the pot which can cause uneven cooking and a ticking sound

CORRECT

Cookware centered correctly on Cooking Zone surface.

Flat pan bottom & straight sides.

Pan size meets or exceeds the recommended minimum size for the Cooking Zone.

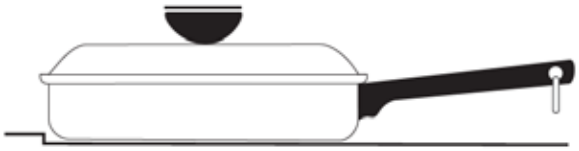

The pot rests completely on the Cooking Zone.

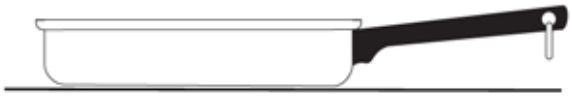

The pot is properly balanced.

WIRING DIAGRAM - EXTRACTOR

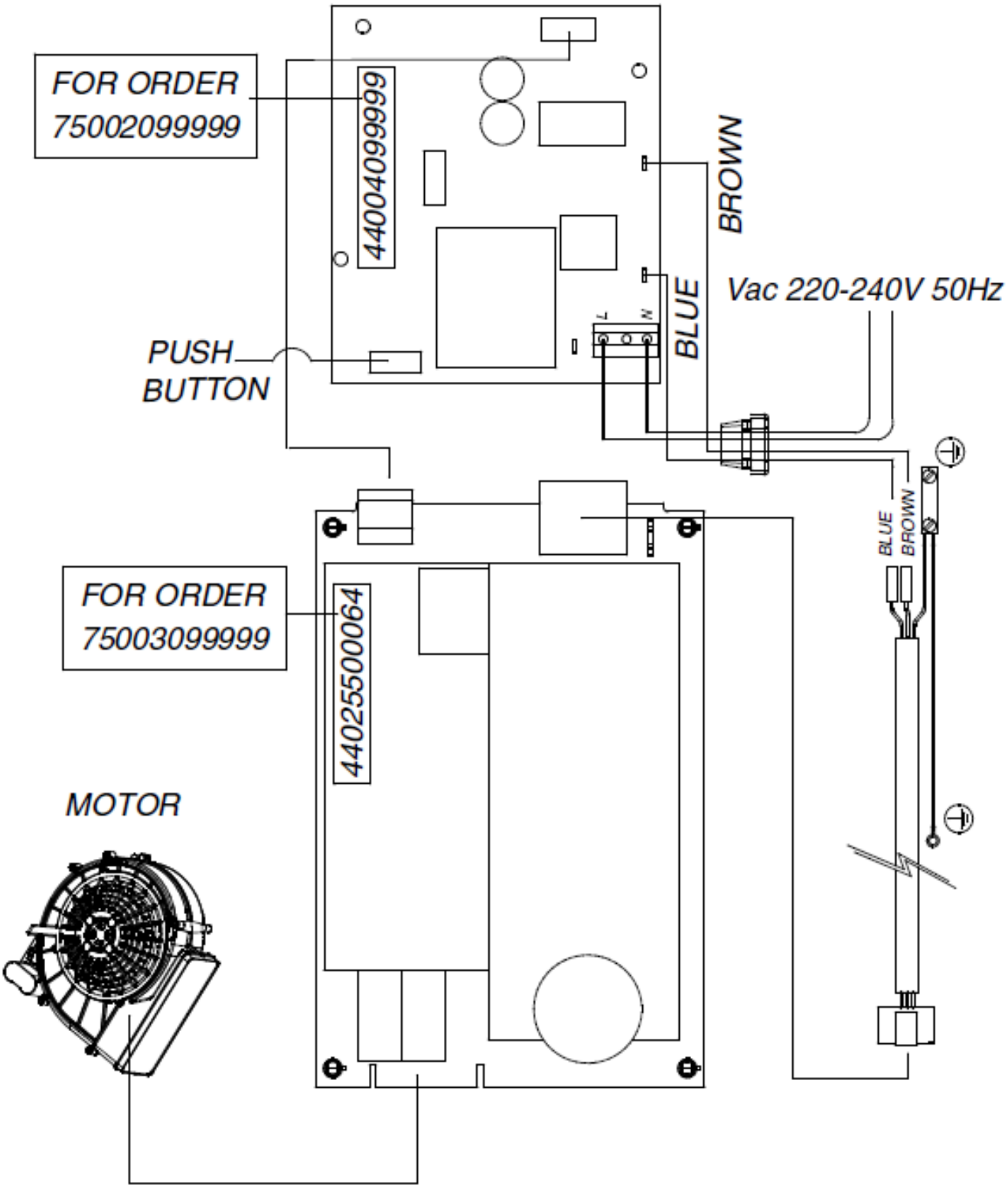

EXPLODED DIAGRAM & PARTS - EXTRACTOR

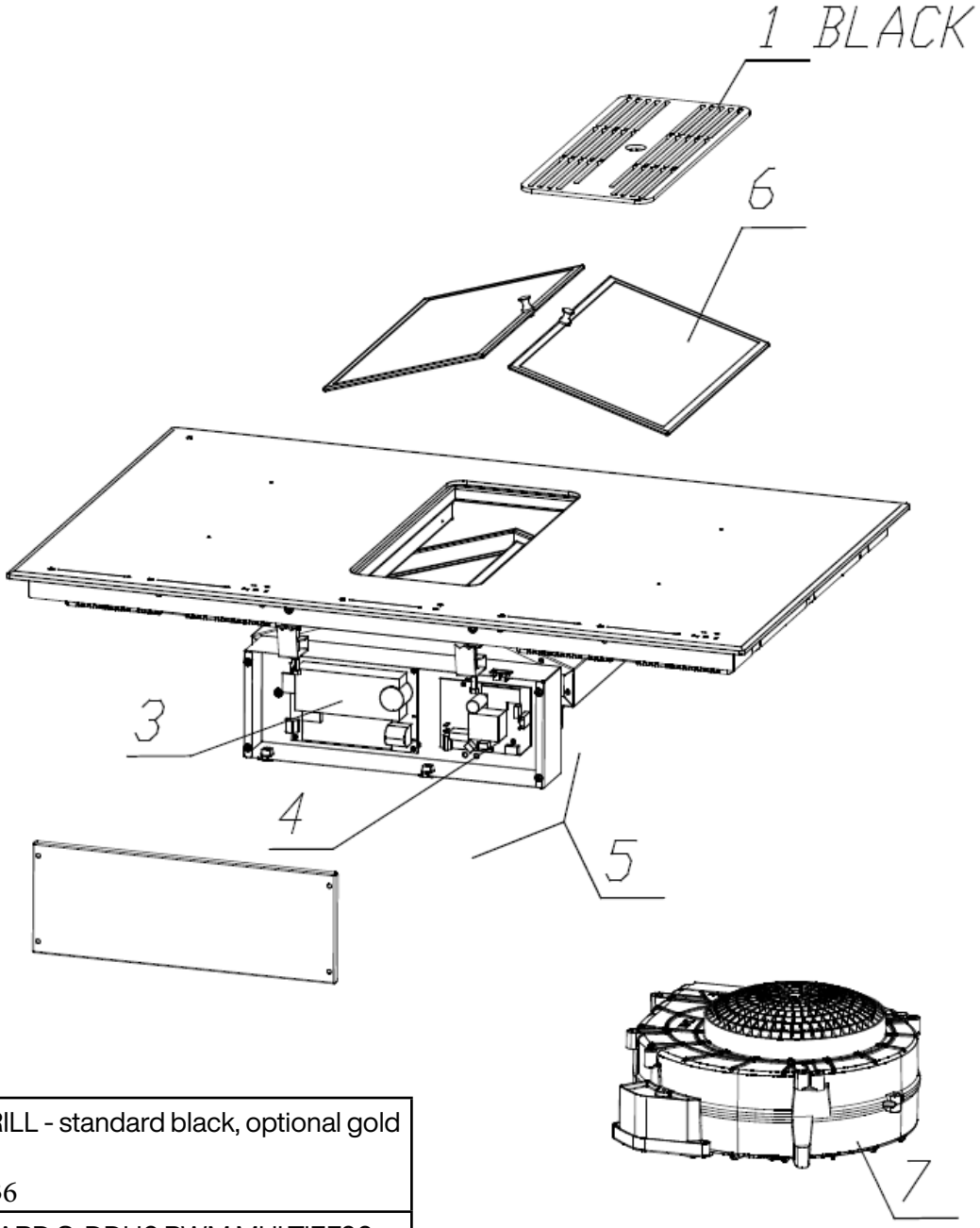

1	S-DDH3 GRILL - standard black, optional gold or copper 75070030136
3	WIRING BOARD S-DDH6 PWM MULTIF.700 75002099999
4	DRIVER WIRING BOARD MULTIFAN700 75003099999
5	S.AUST. ECB-A933 75006009999
6	BLACK GRACE FILTER 75006099064
7	MOTOR MULTIFAN 700 75006099999

EXPLODED DIAGRAM & PARTS - COOKTOP

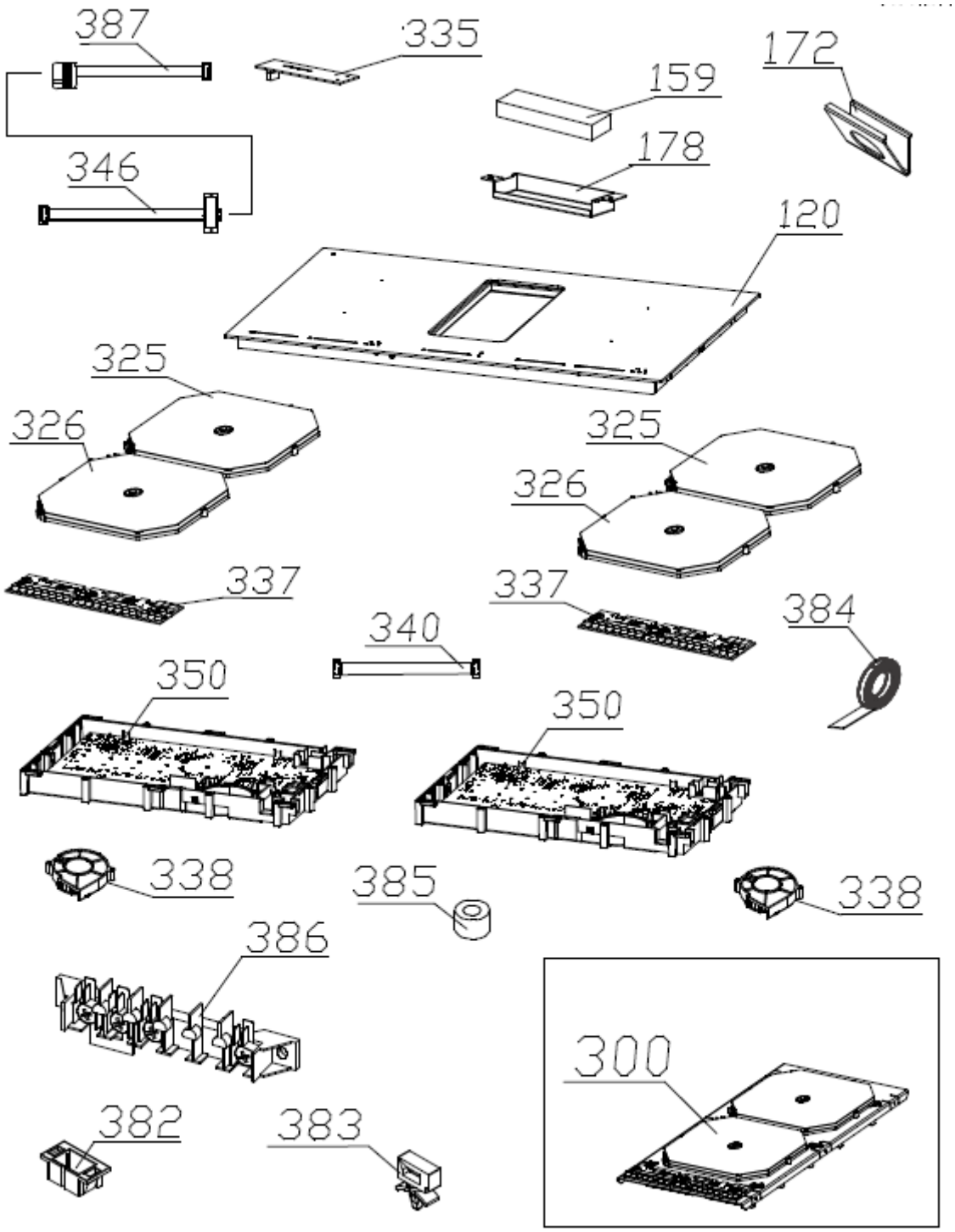

120	GLASS HOB 75003806490	326	INDUCTION OCTA COIL B 75070007123	387	CAVO FLAT EFI-C265 75070006265
159	TOUCH CONTROL 75070204171	335	TC-V S-HD3 WHITE LED 75070004267	350	GENERATOR 75070004052
172	BUILT-IN SPRING 75159306044	337	TOUCH FLEX DOMINO 2 ZONE 75070004273	382	FLAT CABLE GROMMET 75070204172
178	BOARD PROTECTION COVER 75159621754	338	COOLING FAN 75070003160	383	CABLE CLAMPS 75070005040
300	G5 EGO 75070070119	340	INDUCTION CABLE L=280 75070001115	384	INSTALLATION KIT 75188006627
325	INDUCTION OCTA COIL A 75070007122	346	CAVO FLAT EFI-C029 75070006029	385 386	RTSN-M4-8-7-1 75009994871 OK280-6 FV 75004385660

TROUBLESHOOTING

ISSUE	CAUSE	SOLUTION
You cannot activate or operate the appliance.	The appliance is not connected to an electrical supply or it is connected incorrectly.	Check if the appliance is electrical supply. Refer to “Electrical connections” chapter.
	The fuse is released	Make sure that the fuse is the cause of the malfunction. If the fuse releases again and again, contact a qualified electrician.
	It’s been more than 10 seconds from the switching on of the appliance.	Activate the appliance again and set the heat setting in less than 10 seconds.
	You touched 2 or more sensor keys at the same time.	Touch only one sensor key
	Pause function operates.	Refer to “Using the cooktop” chapter.
	There is water or fat stains on the control panel.	Clean the control panel.
The hob deactivates.	You put something on the sensor key ON-OFF.	Remove the object from the sensor key.
Residual heat indicator does not come on.	The zone is not hot because it operated only for a short time.	If the zone operated sufficiently long to be hot contact the Service Centre.
Automatic Warm Up function does not operate.	The zone is hot.	Let the zone become sufficiently cool.
	The highest heat setting is set.	The highest heat setting has the same power as the function.
The heat setting changes between two levels.	Power management function operates.	Refer to “Using the cooktop” chapter.
The sensor keys become hot.	The cookware is too large or you put it too near to the controls	Put large cookware on the rear zones if possible.
“-” comes on.	Safety Switch operates.	Deactivate the appliance and activate it again.
“L” comes on.	The Child Lock function operates	Refer to “Using the cooktop” 4 chapter.
“ ” comes on.	Water or cooking utensils above the control panel.	Remove the objects from the control panel.
“ ” compare the display.	There is no cookware on the zone.	Put cookware on the zone.
	The cookware is incorrect	Use the correct cookware. Refer to “Induction Cooking” chapter
	The dimension of the bottom of the cookware is too small for the zone.	Use cookware with correct dimensions. Refer to “Induction Cooking” chapter.
	The cookware does not cover the cooking zone.	Cover the cooking zone fully.
“E” and a number come on.	There is an error in the appliance.	Disconnect the appliance. Disconnect the fuse. Reconnect. If comes on again, contact Service.
“E 2” comes on.	The induction coils are overheated.	Allow the appliance to cool down.
“E 21” comes on.	The appliance is overheated. The cooling fan might be blocked.	Allow the appliance to cool down. Check for blockages. If comes on again, contact Service.
“E 31” comes on.	Incorrect data configuration.	New configuration needed. Contact Service.
“E 47” comes on.	None or faulty communication between control panel and induction coils.	Ensure that connection cable is plugged on correctly and functional.
“U 400” compare the display.	Control Panel is wrongly connected.	Connect to correct mains voltage.
“E 22”, “E 20”, “E 36”, “E 5”, “E 6” O , “E 9” compare the display.	An internal component of the appliance needs replacing.	Contact Service Centre.

If you cannot find a solution to the problem yourself, contact Arisit at consumer.care@arisit.com or 1300 762 219

WARRANTY INFORMATION

Dear Customer,

Thank you for choosing this Sirius Rangehood.

We are sure that it will provide you with many years of excellent service. At Arisit Pty Limited we are dedicated to ensuring that our customers receive the best possible after-sales care.

The Sirius 'Protection Plan' has been devised to give you added peace of mind. Should you encounter any problems with your appliance, our nationwide team of specially trained technicians will deal with your call swiftly and efficiently.

PRIORITY SERVICE, ACCESSORIES & SPARE PARTS

AUSTRALIA
ARISIT PTY LIMITED
40-50 Mark Anthony Drive, Dandenong South,
VIC 3175, Australia
Phone: 1300 762 219
Email: consumer.care@arisit.com

NEW ZEALAND
ARISIT PTY LIMITED
Phone: (09) 306 1020
Email: arisit.nz@arisit.com

Warranty

By registering your ownership NOW, you qualify for Sirius's Total Peace of Mind Protection Plan.

Australian & New Zealand 3 / 6 Year Protection Plan*

This guarantees your appliance for a full 3 years parts and labour & 10 years for the off-board motors (covering manufacturing defects only) from the date of purchase, subject to the Terms and Conditions overleaf.

***3 Year warranty is extended to a 6 year period only when Sirius ducting is installed.**

6 Year Warranty
when Sirius ducting is used

Your Warranty

Register now to qualify.

Terms & Conditions

These Terms and Conditions apply only to Sirius products distributed in Australia and New Zealand by Arisit Pty Limited.

1. This warranty applies for a period of 3 years on all products.

a) Warranty is extended to a 6 year period when Sirius ducting is installed.

b) All off-board motors are covered under warranty for a 10 year period for manufacturing defects only.

2. Warranty applies for parts and labour in Australia and New Zealand, commencing from date of purchase.

3. This warranty applies only to the original purchaser/hire purchaser of this appliance and cannot be assigned or transferred. Failure to produce documentary proof of the date of original acquisition by the original purchaser will result in a charge being levied for work done, labour and parts supplied.

4. This warranty does not apply to:

a) Consumable items such as filters, fuses, and light bulbs.

b) Damage to body work, paint work, glass, and plastic items (such as, but not limited to windows, covers, baskets, trays, worktops, door handles, control and kick panels.)

c) Corrosion & rust damage. A fee may be charged following warranty claims where no fault is found with the appliance

5. This warranty will not apply where:

a) The fault is caused by accident, misuse, an infestation of insect and or vermin, fire, flood or the use of products not approved by Arisit Pty Limited.

b) There has been a failure to comply with the manufacturer's operating and installation instructions.

c) Service, modification or repair has been carried out by anybody other than an approved Arisit Service Technician.

d) The appliance has been used/ installed anywhere other than a private dwelling, or where it has been used other than for domestic use.

e) The appliance is subject to a rental agreement.

6. Any defective part that has been replaced becomes the property of Arisit Pty. Limited.

7. This warranty applies only to Sirius appliances purchased and installed in Australia and New Zealand.

8. Loss of use of the appliance or consequential loss of any nature is not covered.

9. A charge may be levied at the discretion of Arisit Pty Limited if the call is deemed unnecessary or if the cause of failure is traced to external sourced such as, but not limited to: blown fused, power failure, faulty installation, customer misuse or negligence, etc

10. Where the appliance, the subject of a warranty claim or repair, is used or installed more than TWENTY (20) kilometres from the nearest Arisit Service Division or Authorised Service Agent, the cost of delivery to the nearest Service Division or travel costs for a technician or Authorised Service Agent shall be for the account of the Purchaser. Where a built-in appliance is located or installed outside the Arisit Authorised Service Agent's normal service area, additional travel and labour costs shall be the account of the

Purchaser .

11. Service is offered during normal business hours only, also appliances to have a clear access in a serviceable area

12. Arisit Pty Limited shall not under any circumstances be responsible in terms of this warranty for the replacement or repair of any part of the equipment which may have been damaged in transit, during and after installation or imperfections after installation.

13. Losses caused by act of God, failure to obtain spare parts, strikes or lockouts are not covered.

14. External off board motors must be installed a minimum of 2 metres and maximum of 7 metres away from the rangehood. This is for optimum sound and performance.

15. All motors must be accessible for servicing purposes and if installed above 2 metres from ground height additional cost will be incurred due to OH&S standards for service agents. Prior to install please check minimum & maximum installation details on the Sirius website, FAQ under support tab. We reserve the right to amend any of the above without prior notice.

16. This warranty does not affect your statutory rights.

To register your product for warranty, click the QR code or visit www.siriusbrand.com/pages/register-new-product

6 Year Warranty when Sirius ducting is used

Full replacement warranty on parts and labour. Check website for T&Cs.
10 year warranty on SEM motors.

ARISIT PTY LIMITED (Australia)
ABN 23 091 515 294
40-50 Mark Anthony Drive
Dandenong South VIC 3175
P: Sales & Service: 1300 762 219
F: Sales & Service: (03) 9768 0838
E: arisit@arisit.com

ARISIT PTY LIMITED (New Zealand)
P: (09) 306 1020
E: arisit.nz@arisit.com

Sirius
AUSTRALIA & NEW ZEALAND

www.siriusaustralia.com
www.siriusnz.com

Sirius Hoods and ducting products are only available from our select group of Sirius Professional Stockists nationwide. For the latest list of Sirius Stockists near you, please refer to www.siriusaustralia.com

All efforts have been made to ensure that the information provided in this brochure is correct at the time of printing. Due to continuous product improvement and ongoing development, Sirius reserves the right to make changes to the products and technical data without prior notice.
Some products appearing in this brochure may be for illustrative purposes only. Diagrams are indicative measures only. Prior to commencing cabinetry cutouts the operating/installation instructions accompanying the product must be referred to at www.siriusaustralia.com