Italian Crafted for
Australian Living

Sirius

AUSTRALIA & NEW ZEALAND

THE NERA+ RANGE
USER MANUAL

HEATED GLASS FINISH ONBOARD UNDERMOUNT COLLECTION

SL927ELH520	9351116006099
SL927ELH850	9351116006105
SL927ELHD520	9351116006129
SL927ELHD850	9351116006112

www.siriusaustralia.com | www.siriusnz.co.nz

Congratulations on your purchase and thank you for choosing this Sirius product.

CONTENTS

Warnings 3

Before Your Install 5

Nera Classic Range - Glass-Finish Undermount 6

- Rangehood Placement 7
- Ducting 9
- Installation 10
- Using the Rangehood 12
- Maintenance 13

Parts 15

Extractor Wiring 17

Warranty 19

WARNINGS

The air outlet of the appliance must not be connected to a flue which is used for exhausting other fumes from appliances, such as a central heating, boilers etc..

For the external exhausting of the fumes, comply with the regulations in force.

The motor of the peripheral exhausting group is powered by the cooker-hood placed in the kitchen.

Before connecting the cooker hood to the mains supply, make sure that the voltage indicated in the rating plate corresponds to the mains voltage in the home.

Before carrying out any sort of maintenance or cleaning operation, make sure that the appliance is disconnected from the electrical mains.

An appropriate maintenance ensures a good working and a good performance in the long run.

All models are built in Class I, therefore they must be earthed.

Range hoods and other cooking fume extractors may adversely affect the safe operation of appliances burning gas or other fuels (including those in other rooms) due to back flow of combustion gases. These gases can potentially result in carbon monoxide poisoning. After installation of a range hood or other cooking fume extractor, the operation of flued gas appliances should be tested by a competent person to ensure that back flow of combustion gases does not occur.

If a stationary appliance is not fitted with a supply cord and a plug, or with other means of disconnection from the supply mains, it is necessary to predict a contact separation in all poles that provide full disconnection under over-voltage Category III conditions.

Means for disconnection must be in-governance with local, state and national building regulations fixed wiring in accordance with the wiring rules.

This appliance can be used by children aged from 8 years and above and persons with reduced physical, sensory or mental capabilities or lack of experience and knowledge if they have been given supervision or instruction concerning use of the appliance in a safe way and under stand the hazards involved.

Children shall not play with the appliance.

Cleaning and user maintenance shall not be made by children without supervision.

If the power cable is damaged, it must be replaced by a cable or a special assembly, available from the manufacturer or its service department technique.

Children shall not play with the appliance.

Cleaning and user maintenance shall not be made by children without supervision.

If the power cable is damaged, it must be replaced by a cable or a special assembly, available from the manufacturer or its service department technique.

The room must have adequate ventilation when using the kitchen hood simultaneously with other appliances that use gas or other fuels (not applies to appliances that simply release the air back into the room).

There is the possibility of fire if the cleaning operations are not carried out as indicated in the instructions.

Do not prepare food over open flames as sucked flames are a risk of damage to the appliance.

ATTENTION

The accessible parts can burn if used in conjunction with the cooking appliances.

ABOUT THE ONBOARD UNDERMOUNT COLLECTION

- This appliance is designed for normal domestic use. It is not designed for commercial or industrial use, or for purposes other than those for which it was designed.
- The appliance must be used by adults. Keep the appliance is out of reach of children and always supervise when in use. Children must not operate the controls.
- When the appliance is delivered, check the overall appearance of the packaging. Any remarks should be written on the delivery coupon, of which you keep a copy.
- Any consequences of or damage from incorrect installation or incorrect use of the appliance will not be covered by the manufacturer's guarantee.
- Do not change or try to change the characteristics of this appliance. This would be a danger and will void any warranties.
- Repairs must be performed only by an authorised technician. Always disconnect the hood before carrying out cleaning or maintenance operations.
- Adequately ventilate the room when a cooker hood and other appliances, powered by energy other than electricity, are used simultaneously, so that the hood does not suck any combustion fumes.
- Do not cook food over open flames (flambé) or operate cooktops without pots or pans on them under the hood itself (the flames sucked into the hood might damage the appliance).
- Frying with oil must be done under constant supervision as hot oils and fats may ignite
- Respect the guidelines for cleaning and replacement of grease filters. Accumulated deposits of grease are a fire hazard.
- Never use steam or high-pressure devices for cleaning your hood (regulations regarding electrical safety).
- Never use the rangehood without the grease filters in place.
- The recommended install height from the cooking surface to the rangehood is minimum 600mm to maximum 750mm.
- When handling the downdraft, never put your hands or other objects in the field of action of the unit.
- This appliance may be used by children aged from 8 years old if supervised. Cleaning and user maintenance must not be made by children.
- If the supply cord is damaged, it must be replaced by the manufacturer, its service agent or similarly qualified persons in order to avoid a hazard.
- If the supply cord of the appliance is provided with a cooktop, this must be easily accessible.
- You may also find these instructional materials on our website: www.siriusaustralia.com

WARNING

NEVER try to extinguish a fire with water! Switch off the appliance and cover flame with a fire blanket. If necessary, call the emergency services. Ensure all flames are extinguished.

In the case of the version with external motor, for normal downdraft operation, it is necessary to use an external motor made by Sirius.

It is important to keep these instructions for use with the appliance.

If the appliance should be sold or passed on to others, make sure that the instructions are passed on with it.

We thank you for taking note of these warnings before installing and using the appliance. They have been written for your personal safety and the safety of others.

Emergency Services Australia: 000

Emergency Services New Zealand: 111

BEFORE YOU INSTALL - USEFUL DUCTING INFORMATION

Sirius warranty covers only Sirius product. If you choose to install a non-Sirius branded accessory such as flexible ducting, Sirius will only warrant the rangehood and motor. If installation is found to be the cause of failure or issue then charges will apply for service and parts.

Flexible ducting is not permitted under any circumstances. Flexible ducting has been found to increase noise levels, increase vibration and reduce airflow. Sirius Semi-rigid or solid ducting can be used in lieu. There is a range available to suit any application.

WARNING

The appliance must be installed and connected to the power supply only by a qualified technician.

- There should be adequate ventilation of the room when the rangehood is used at the same time as appliances burning gas or other fuels (not applicable to appliances that only discharge the air back into the room)
- The details concerning the method and frequency of cleaning
- There is a fire risk if cleaning is not carried out in accordance with the instructions
- Do not flambé under the range hood
- **CAUTION**: Accessible parts may become hot when used with cooking appliances

Ducting available at www.siriusaustralia.com
6 Year Warranty when Sirius Ducting is used. Full replacement warranty on parts and labour.
See website for terms & conditions.
A reduction in the duct diameter from stated ducting size will void warranty.
If you are in doubt about the ducting, please contact Sirius on 1300 762 219 prior to installation

The symbol on the product or on its packaging indicates that this product may not be treated as household waste. Instead it shall be handed over to the applicable collection point for the recycling of electrical and electronic equipment. By ensuring this product is disposed of correctly, you will help prevent potential negative consequences for the environment and human health, which could otherwise be caused by inappropriate waste handling of this product. For more detailed information about recycling of this product, please contact your local city office, your household waste disposal service or the shop where you purchased the product. This appliance is marked according to the European directive 2/96/EC on waste electrical and electronic equipment (WEEE).

The Nera+ Range
Heated Glass-Finish Onboard Undermount

SL927ELH520

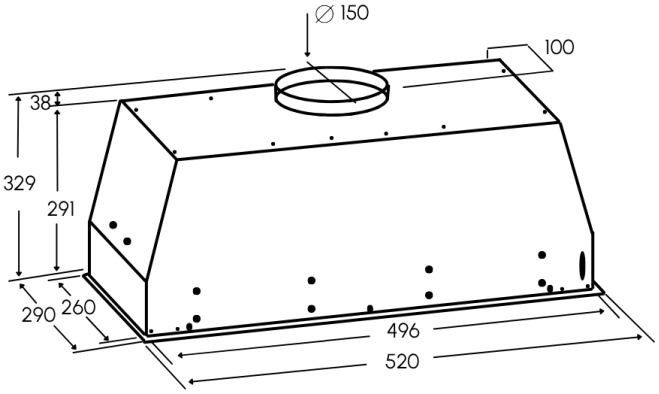

SL927ELH850

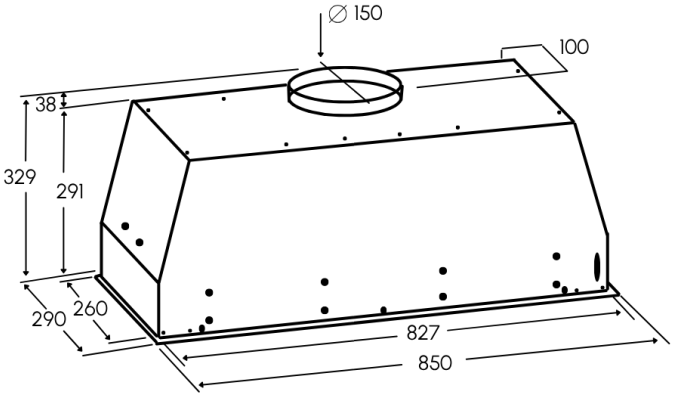

EXTRA DEEP MODELS

SL927ELHD520

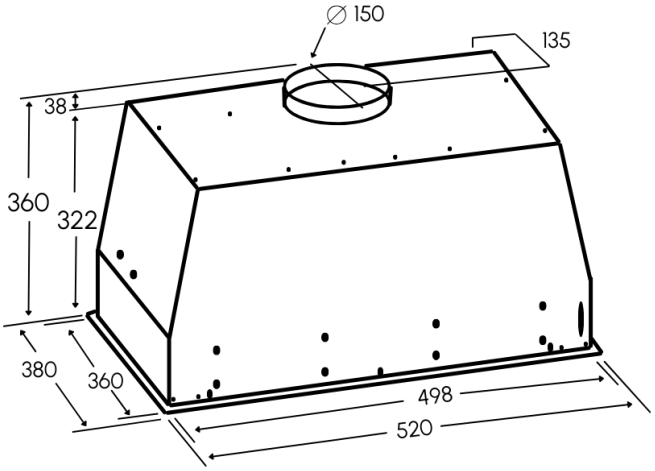

SL927ELHD850

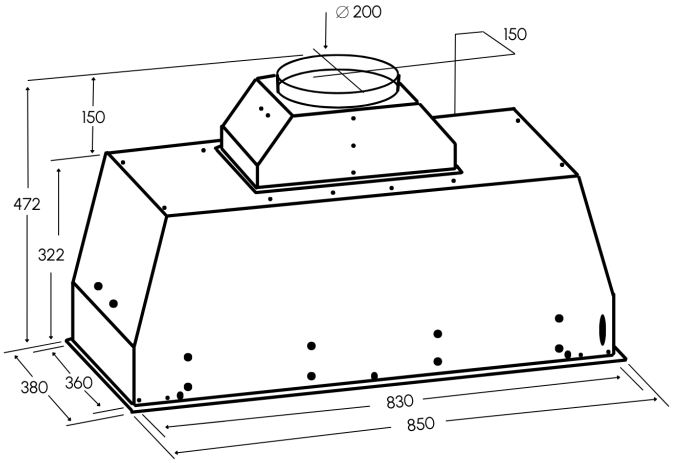

WHERE TO PLACE YOUR RANGEHOOD

Ducting & Clearances

WARNING

Min. 600mm - Max. 700mm for induction cooktops.
Min. 650mm - Max. 750mm gas cooktops.

If the rangehood is positioned above the max height recommended, warranty may be compromised as performance of the rangehood will be affected. Measurement is taken from the top of the trivets to the underside of the hood. (Fig.1)

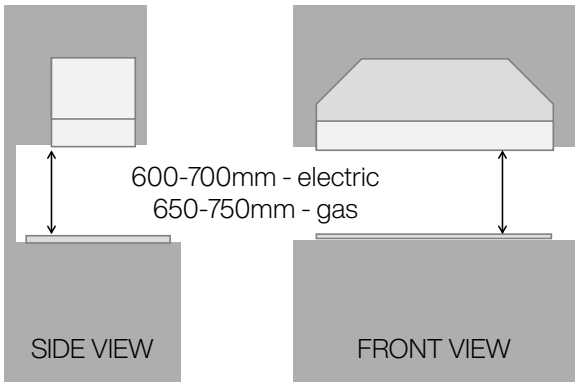

Fig.1

- The air being drawn can't be conveyed through or into a duct used to let out fumes from appliances fed by energy other than electric power (eg. centralised heating, radiators, water heaters, etc.).
- Attention: remove any possible PVC film from the stainless steel, including the filters.
- To externally vent, please comply with the rules as set out by your governing area.
- The room must be provided with adequate ventilation when a rangehood and additional appliances are fed by energy other than electric power (gas, oil, or coal stoves, etc.) and are used simultaneously. The rangehood, when evacuating the air, could generate a negative pressure in the room which can't exceed the limit of 0.04 mbar, in order to avoid the suck of exhausts deriving from the heat source. Therefore the room should be provided with air intakes to allow a constant flow of fresh air.
- The minimum distance of 60cm should be allowed between the supporting surface for the cooking vessels (trivets) on the hob and the lowest part of the range hood (filter). If the instructions for installation specify a greater distance, this has to be taken into account

Rangehood Placement

When placing your rangehood, ensure it is placed to cover the most cooktop surface as possible.

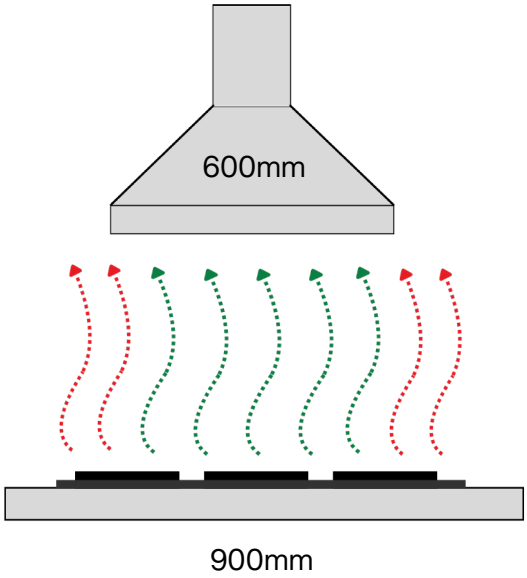

Fig.2a

Using a rangehood that is smaller than the cooktop may void the warranty and will result in a poor performance. The rangehood needs to be adequately sized to effectively capture and remove smoke, steam, and cooking odours.

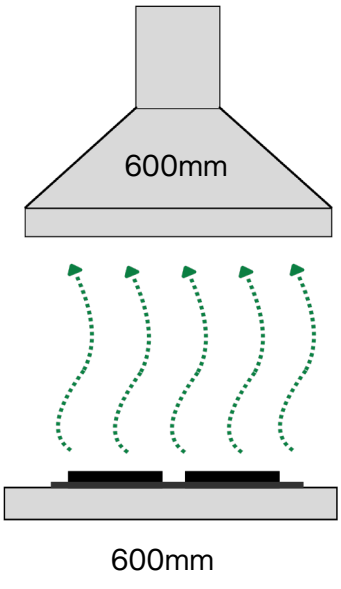

Fig.2b

For optimal performance, it is crucial to match the rangehood size to the cooktop. This ensures the cooking area is covered and extraction is being pulled from correct area.

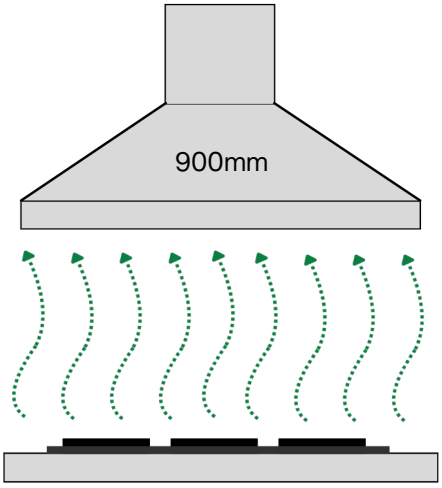

Fig.2c

For even better performance especially for cooking with multiple burners and strong odours, it may be recommended to use a rangehood larger then the cooktop area. Please also note Induction cooktops produce 50% more condensation then gas so please also take this into consideration when choosing the best rangehood for your kitchen.

Position for Overhead Cabinet Rangehood Installation

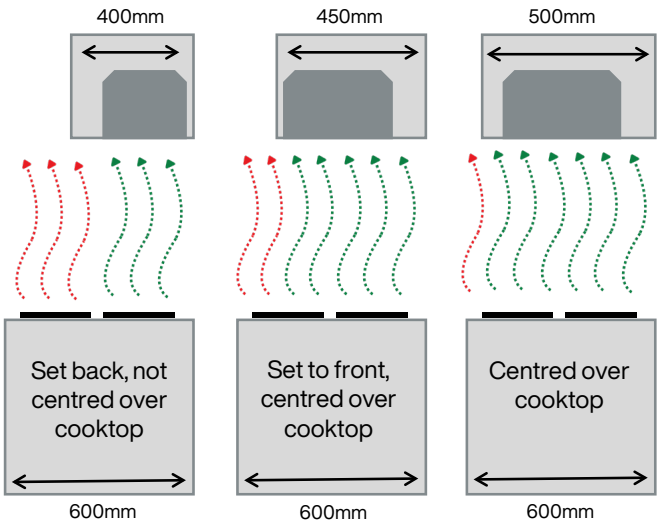

Fig.3

Before installing the rangehood, it is essential to take into account the depth of the benchtop and overhead cabinetry.

This information serves as a general guide; the diagrams are not to scale and may not cover all situations. In the diagrams, the cooktop is centrally positioned on the benchtop.

If the overhead cabinetry extends deeper than usual, position the rangehood as close to the front as possible. This will optimise extraction by covering more of the cooktop surface.

If the rating label in the rangehood shows the symbol ⧈ the appliance is built in Class II° and it **does not need** any earth connection.

If the rating label in the rangehood does not show the symbol ⧈ the appliance is built in Class I° and it **does need** the earth connection.

When performing the electrical connections on the appliance, please make sure that the current-tap is provided with earth connection and that voltage values correspond to those indicated on the label placed inside the appliance itself.

Before carrying out any cleaning or maintaining operations, the appliance needs to be switched off. If the appliance is not provided with a non-separable flexible cable and plug, or with another device ensuring omnipolar disconnections from the grid, with an opening distance between the contacts of at least 3mm, then such disconnecting devices must be supplied within the fixed installation. If the fixed appliance is endowed with a supply cord and a plug, the appliance has to be put in a place where the plug can be reached easily.

The use of materials which can burst into flames should be avoided in close proximity of the appliance. When frying, please pay particular attention to fire risk due to oil grease. Being highly flammable, fried oil is especially dangerous. Do not use uncovered electric grills. In order to avoid possible fire risk, all instructions for grease-filter cleaning and for removing eventual grease deposits should be strictly followed.

easyKIT

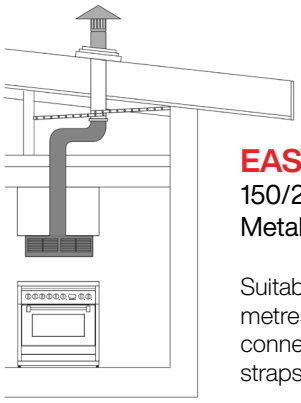

EASYROOFKIT
150/200mm diameter
Metal/Tiled Roof Installations

Suitable for duct runs of up to 4 metres, semi-rigid, solid duct, internal connectors, clamps, flashing, bracing straps and galvanised cowl included.

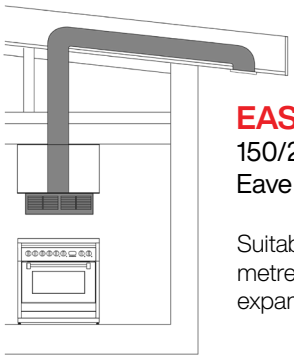

EASYEAVEKIT
150/200mm diameter
Eave Installations

Suitable for duct runs of up to 3 metres, semi rigid, clamps 125/150 expander and eave vent included .

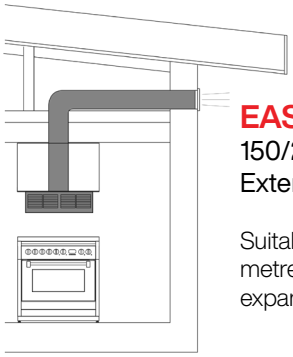

EASYWALLKIT
150/200mm diameter
External Wall Installations

Suitable for duct runs of up to 3 metres, semi rigid, clamps 125/150 expander and wall vent include.

*Ducting Diameters:
150mm diameter for single motor
200mm diameter for twin motor

For the 1500mm rangehood, a comprehensive list of 300mm components are available. Please check our website, www.siriusaustralia.com

All EasyKits can be extended with 1 set (2) Universal Ring Clamps and 1 x SRPRO30-150 - Semi Rigid Duct length that expands upto 3 metres.

When ducting rangehood, options are as follows:

- NOTE: For SEM 11 & SEM 81 only: From motor to exit point, additional lengths of duct will be required from the rangehood to the motor.

Note:
Rangehood and SEM motor cannot be installed back-to-back. There must be a minimum of 2 metres between rangehood and motor for best performances and noise reduction reasons.

WARNING

Failure to install the screws or fixing device in accordance with these instructions may result in electrical hazards

6 Year Warranty
when Sirius ducting is used

HEATED GLASS-FINISH ONBOARD UNDERMOUNT RANGEHOOD INSTALLATION

Before installing the appliance, make sure that none of the parts are damaged in any way. In case of damaged parts, contact your retailer and do not proceed with installation. Read all of the following instructions with care before installing the appliance.

- Use ducting within the min/max specifications
- Use ducting of the shortest possible length
- Limit the number of ducting bends
- Only use materials approved by standards and regulations
- Do not make any changes in ducting diameter (recommended constant diameter: Ø 150 mm / Ø 200 mm or equal surface area).

Before installing the appliance - in order not to damage the appliance itself - the metal grease filter should be removed. These filters could be removed by pushing the handles towards the back side of the rangehood and pulling it downwards to unfasten it from its slot. See Fig4a and 4b

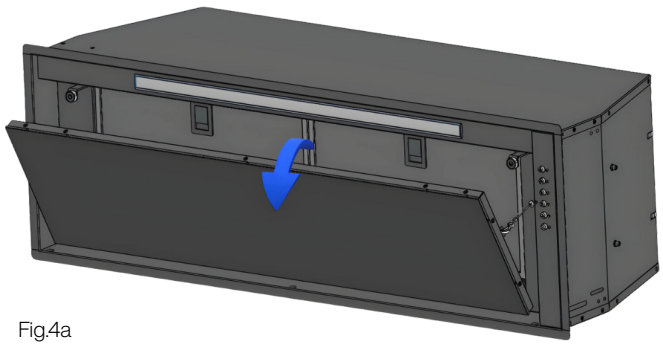

Fig.4a

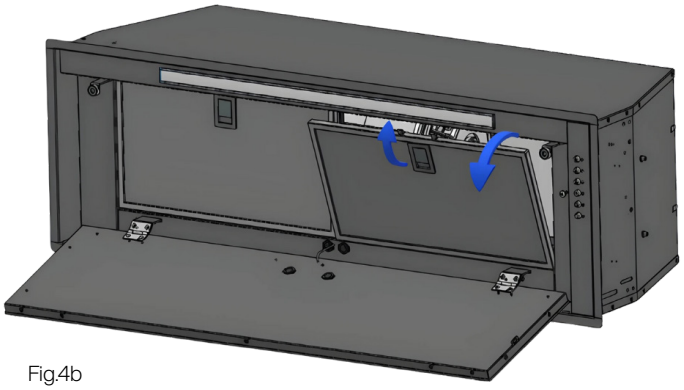

Fig.4b

To install the appliance please follow these instructions:

- The appliance must be installed by qualified technicians, or where possible use a Sirius recommended installer. See siriusaustralia.com. In order to avoid damage to the electronic parts of the appliance, please do not use additional screws.
- Essential precautions to respect before installing the appliance are the following:

To have made a cutout on the bottom of the cabinet which is suitable to hold the appliance in position (Fig5):

SL927ELH520 - W502 x D265mm
SL927ELH850 - W835 x D265mm
SL927ELHD520 - W502 x D365mm
SL927ELHD850 - W835 x D365mm

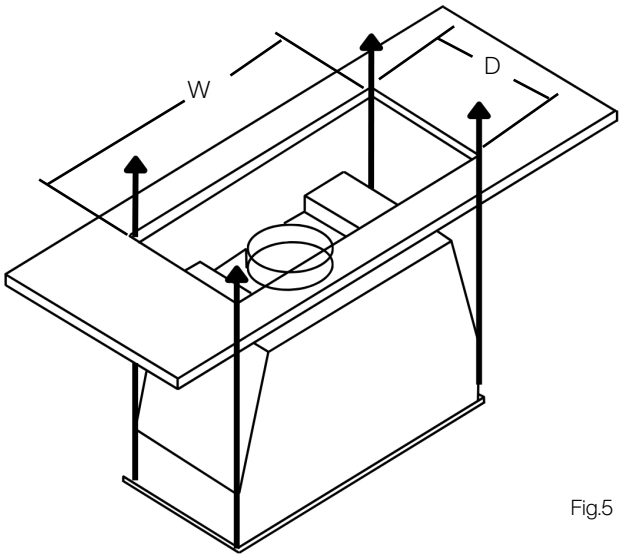

Fig.5

1. Prepare the power supply - 240 volt.
2. Prepare a hole for the exhaust - 160mm diameter

- Do not use screws to fix the ducting to the rangehoods as they will prevent the movement of non-return valves.
- Limit the number of elbows in the ducting, since each elbow reduces the duct efficiency by 1 metre. (i.e. if you use two 90° elbows, the length of ducting must not exceed 5 metres.)
- Avoid abrupt direction changes.
- Use 150mm constant diameter ducting for the whole length

To make it easier to install the rangehood inside the cabinet, it is recommended to remove the glass. Unscrewing the four M3x10 screws as shown in Fig.6a and 6b

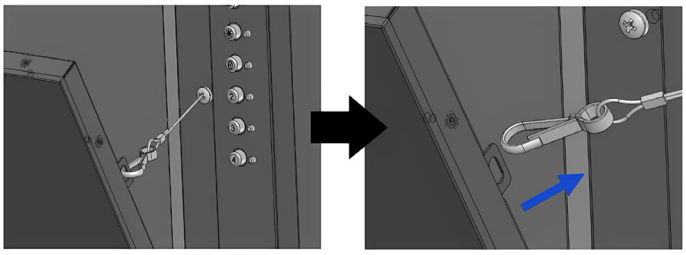

Fig.6a

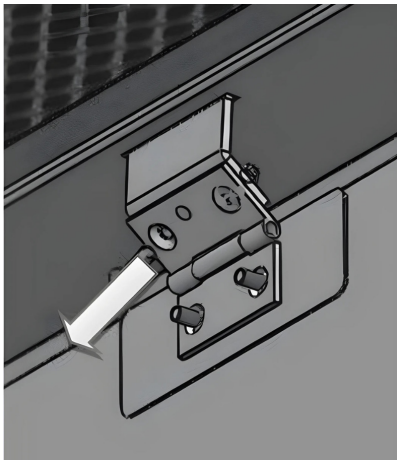

Fig.6b

WARNING

The rangehood is quite heavy, so two people will be needed for installation.

1. To install the appliance, adjust the position of the adjustable side-springs using the supplied screws (Fig7), according to the thickness of the board, in which the appliance will be fixed.

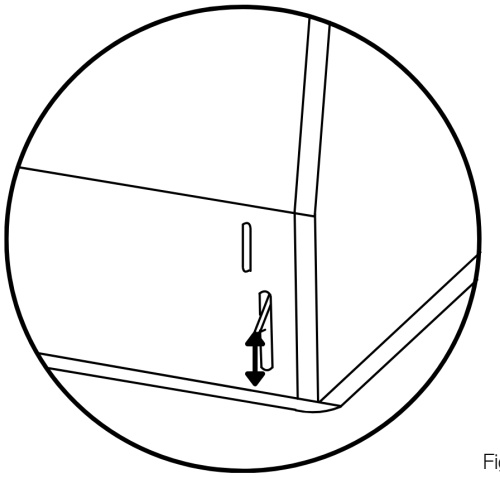

Fig.7

2. Insert the rangehood into the cutout made in the cabinet until the stop click of the side-springs is heard and the rangehood is supported. (Fig.8)
3. Insert the 25mm screws provided into the holes inside the rangehood (Fig.9) to fix it to cabinetry.
4. Insert the grease filter.

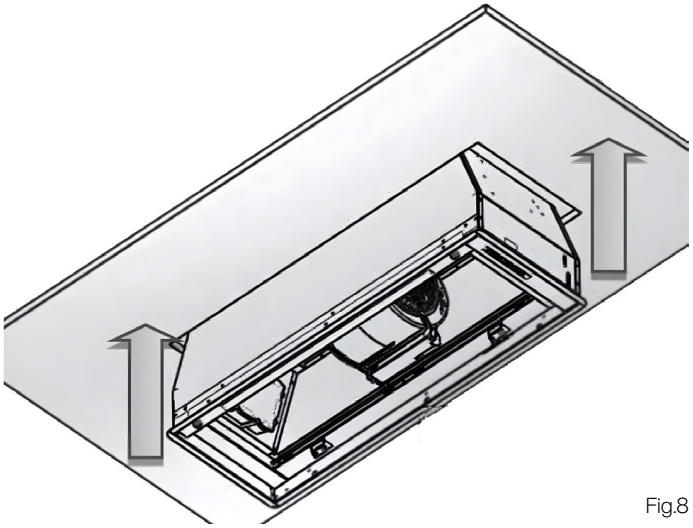

Fig.8

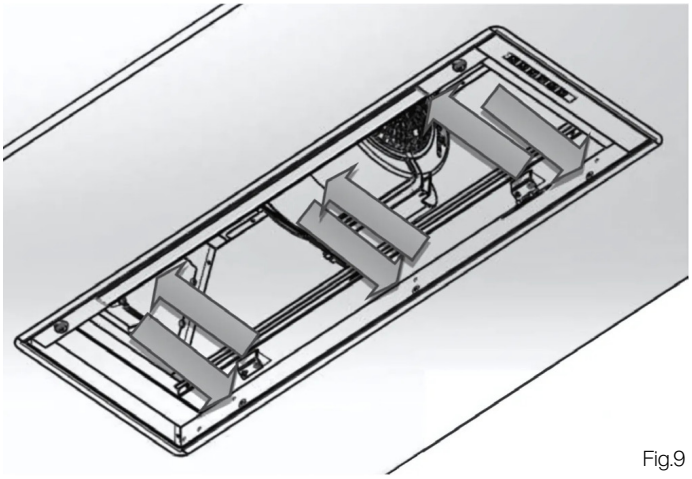

Fig.9

Caution:
Before connecting any ducting to the motor, make sure the non-return valves, located on the air outlet of the motor, can swing open.

USING THE RANGEHOOD

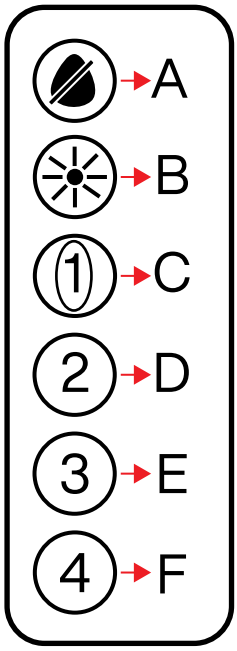

Manual control buttons:

A: Heated Glass - On/Off

B: Light - On/Off

C: Fan Speed 1 - Everyday Use

D: Fan Speed 2

E: Fan Speed 3

F: Fan Speed 4 - Boost

Usage Tip

Turn on fan 10 minutes before cooking to optimise performance.

Heated Glass System

This is an innovative anti-condensation system, based on a thermal resistances inside the glass panels. By heating the surface in contact with the vapours coming from the induction hob, this system does not allow condensation or water drops to develop and fall on the hob.

To activate: select ***A***
Takes approx. 3 mins to heat up and prevents condensation buildup.

Auto Run-On Function

This function allows the automatic switching off after 4 hours working from the last operation.

To activate: select any fan speed and hold for 3 seconds.
Rangehood will run for 10 minutes to clear the air and will automatically turn off.

Dimmable Light Function

Allows for the lights to dim, ranging from 20% to 100%

To adjust brightness: press and hold ***B*** to dim or increase brightness to desired level.

Dynamic Light Function

This function allows the automatic switching off after 4 hours working from the last operation.

To adjust: turn unit off.
Hold down ***C*** until lights turn on.
Hold down ***B*** to cycle through.
To select temperature, hold down ***C*** until lights turn off.
This will save the colour temperature.

MAINTENANCE

Accurate maintenance guarantees good functioning and long-lasting performance.

Particular care is due to the grease filter panel. It can be removed by pushing its handle toward the back side of the rangehood and pulling the filter downwards so to unfasten it from its slot. To insert the filter just perform the opposite operation.

The grease filter needs cleaning by regular washing, this can be done by hand or in a dishwasher every two months or after 30 continuous hours, depending on its use.

Button lights will flash when filter needs to be cleaned. To reset, press and hold the the (1) button for 2 seconds when the motor is off.

Filters may require cleaning sooner if frequent heavy frying is done.

To clean the appliance itself, water and detergent are recommended, while abrasive products should be avoided. For steel appliances specialised detergents are recommended (please follow the instructions indicated on the product itself to obtain the desired results).

To remove the rangehood from the cabinet, remove the fixing screws (Fig.9) using a screwdriver, and remove the grease filters (Fig.4).

Push down on the small handle of the springs which are inside the rangehood using the necessary strength to unhook the hood from the cabinet.

WARNING

If the supply cord is damaged, it must be replaced by the manufacturer or its service agent or a similarly qualified person in order to avoid a hazard.

REPLACING THE LED LIGHT STRIP

Before replacing the LED light, switch off the rangehood, then - by using appropriate tools - remove the LED light from its slot. (Fig 10a - b)

Take out the LED light from its connector and replace. (Fig 10c - d)

- To find the correct LED light, please contact Sirius directly on 1300 762 216.
- NB: light is easier to remove from the centre of LED strip. Use a small, flathead screwdriver, palette knife or blunt butter knife.

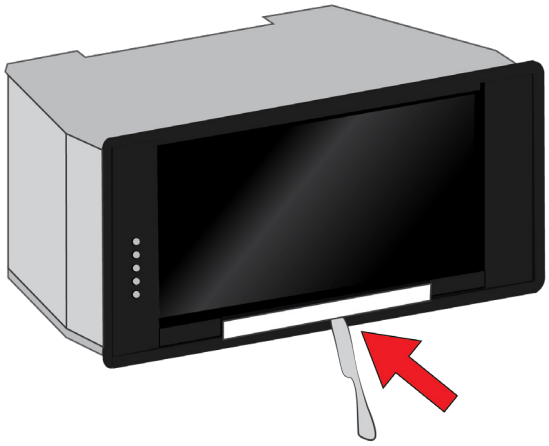

Fig.10a

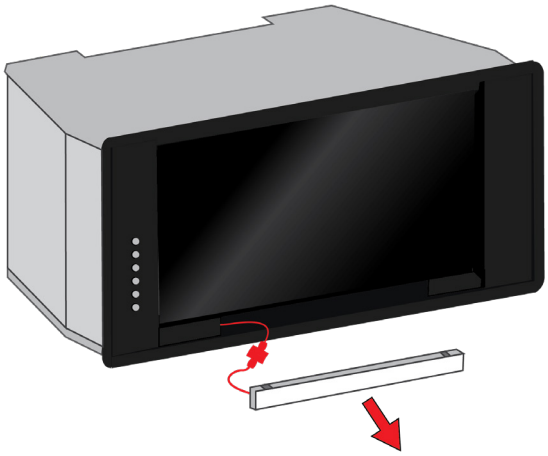

Fig.10b

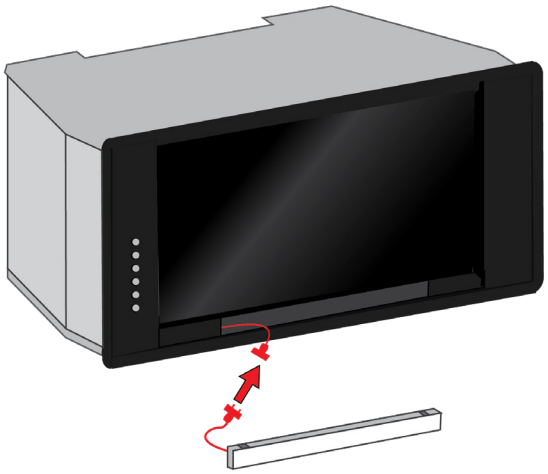

Fig.10c

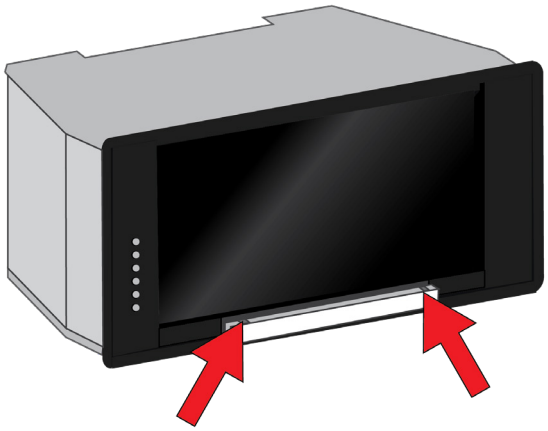

Fig.10d

PARTS - SL927ELH

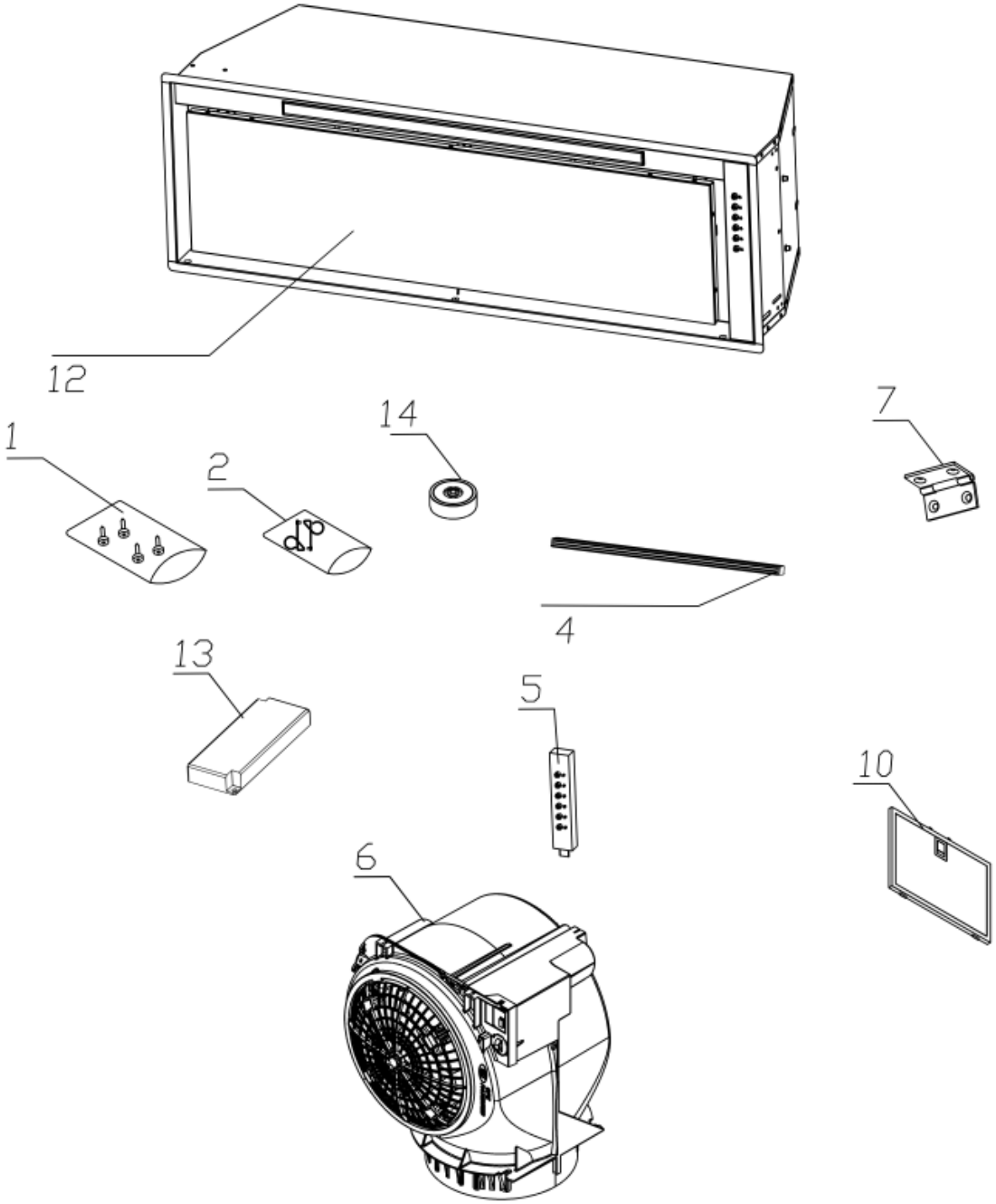

1	ACCESSORY BAG SPS-77008199999	7	FLAT MILLED HINGE SPS-75096003003
2	SPRINGS SPS-77009599999	10	FILTER 520 - SPS-75080913028 850 - SPS-75009230044
4	LED LIGHT STRIP 520 - SPS-75001320028 850 - SPS-75001515029	12	BLACK GLASS 520 - SPS-75009270217 850 - SPS-75009270560
5	BUTTON PANEL SPS-75009270999	13	TRANSMITTER SPS-75070092304
6	MOTOR SPS-75051007000	14	MAGNET 520 - SPS-75007026155 850 - SPS-75042964553

PARTS - SL927ELHD

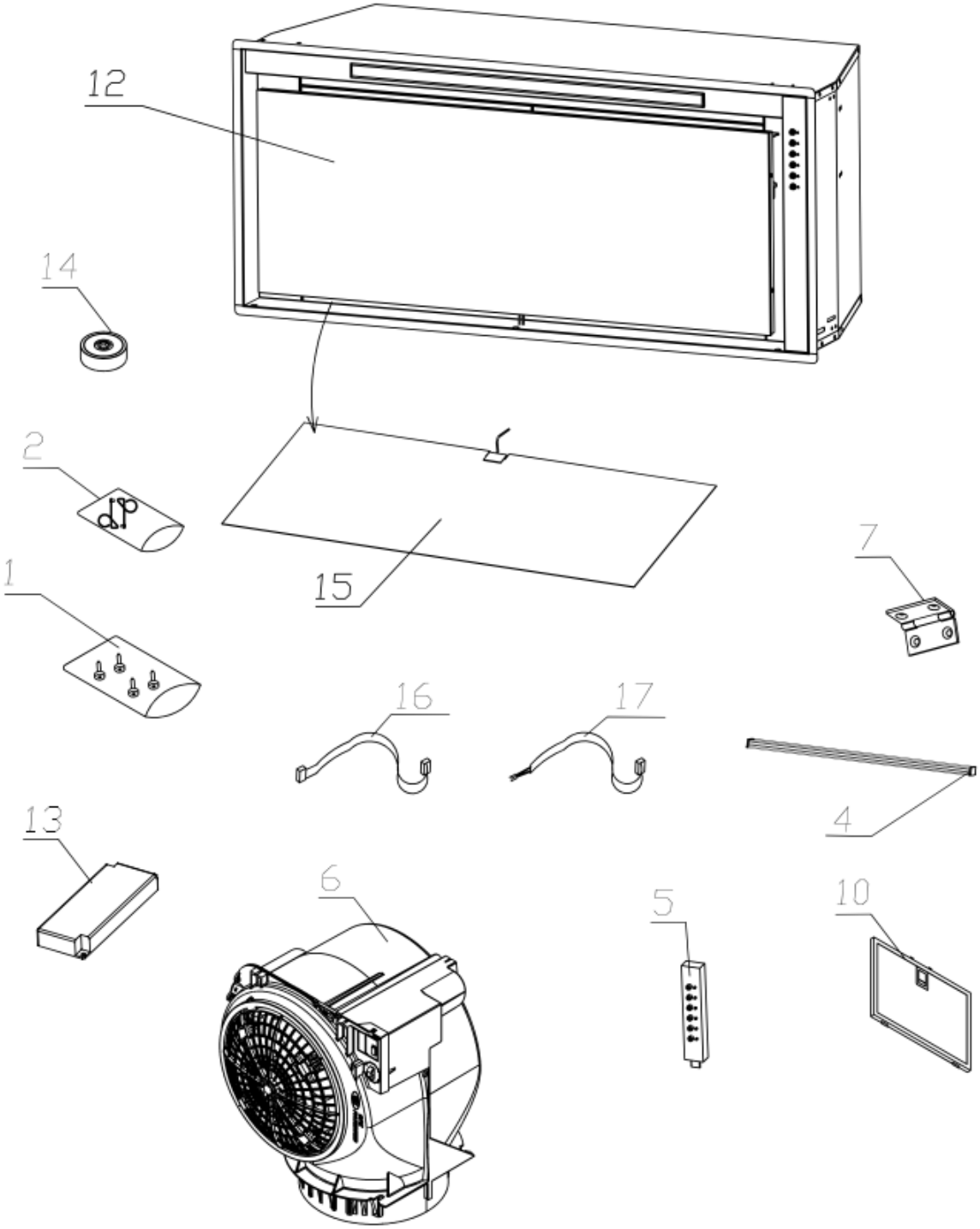

1	ACCESSORY BAG SPS-77008199999	7	FLAT MILLED HINGE SPS-75096003003
2	SPRINGS SPS-77009599999	10	FILTER SPS-75009270012
4	LED LIGHT STRIP 520 - SPS-75001320028 850 - SPS-75001515029	12	BLACK GLASS 520 - SPS-75009270251 850 - SPS-75009270234
5	BUTTON PANEL SPS-75009270999	13	TRANSMITTER SPS-75070092304
6	MOTOR SPS-75051007000	14	MAGNET 520 - SPS-75042964553 850 - SPS-75042964553

WIRING DIAGRAM

SL927ELH52, SL927ELHD52, SL927ELH85

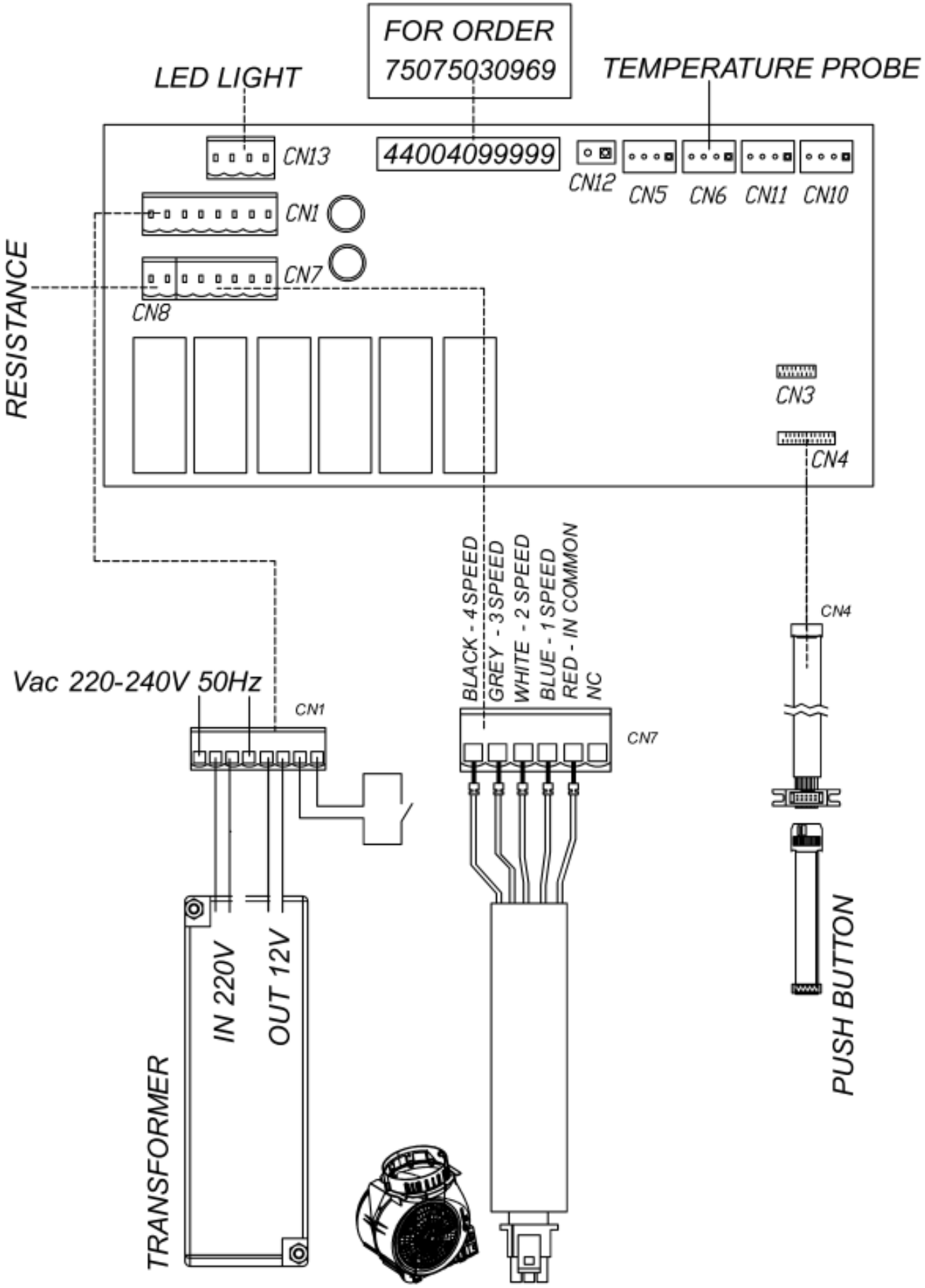

WIRING DIAGRAM

SL927ELHD85

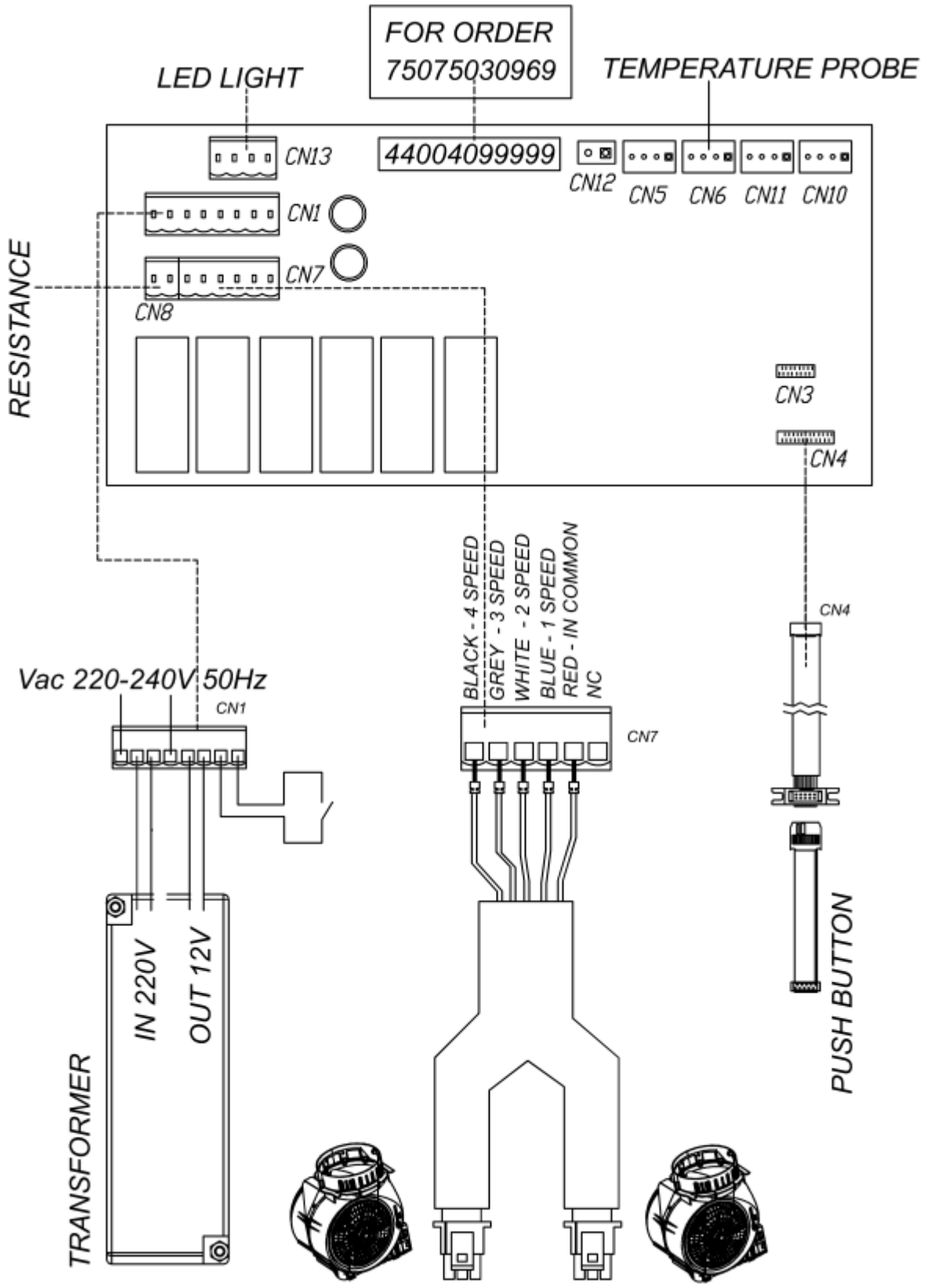

WARRANTY INFORMATION

Dear Customer,

Thank you for choosing this Sirius Rangehood.

We are sure that it will provide you with many years of excellent service. At Arisit Pty Limited we are dedicated to ensuring that our customers receive the best possible after-sales care.

The Sirius 'Protection Plan' has been devised to give you added peace of mind. Should you encounter any problems with your appliance, our nationwide team of specially trained technicians will deal with your call swiftly and efficiently.

PRIORITY SERVICE, ACCESSORIES & SPARE PARTS

AUSTRALIA
ARISIT PTY LIMITED
40-50 Mark Anthony Drive, Dandenong South,
VIC 3175, Australia
Phone: 1300 762 219
Email: consumer.care@arisit.com

NEW ZEALAND
ARISIT PTY LIMITED
Phone: (09) 306 1020
Email: arisit.nz@arisit.com

Warranty

By registering your ownership NOW, you qualify for Sirius's Total Peace of Mind Protection Plan.

Australian & New Zealand 3 / 6 Year Protection Plan*

This guarantees your appliance for a full 3 years parts and labour & 10 years for the off-board motors (covering manufacturing defects only) from the date of purchase, subject to the Terms and Conditions overleaf.

***3 Year warranty is extended to a 6 year period only when Sirius ducting is installed.**

6 Year Warranty
when Sirius ducting is used

Your Warranty

Register now to qualify.

Terms & Conditions

These Terms and Conditions apply only to Sirius products distributed in Australia and New Zealand by Arisit Pty Limited.

1. This warranty applies for a period of 3 years on all products.

a) Warranty is extended to a 6 year period when Sirius ducting is installed.

b) All off-board motors are covered under warranty for a 10 year period for manufacturing defects only.

2. Warranty applies for parts and labour in Australia and New Zealand, commencing from date of purchase.

3. This warranty applies only to the original purchaser/hire purchaser of this appliance and cannot be assigned or transferred. Failure to produce documentary proof of the date of original acquisition by the original purchaser will result in a charge being levied for work done, labour and parts supplied.

4. This warranty does not apply to:

a) Consumable items such as filters, fuses, and light bulbs.

b) Damage to body work, paint work, glass, and plastic items (such as, but not limited to windows, covers, baskets, trays, worktops, door handles, control and kick panels.)

c) Corrosion & rust damage. A fee may be charged following warranty claims where no fault is found with the appliance

5. This warranty will not apply where:

a) The fault is caused by accident, misuse, an infestation of insect and or vermin, fire, flood or the use of products not approved by Arisit Pty Limited.

b) There has been a failure to comply with the manufacturer's operating and installation instructions.

c) Service, modification or repair has been carried out by anybody other than an approved Arisit Service Technician.

d) The appliance has been used/ installed anywhere other than a private dwelling, or where it has been used other than for domestic use.

e) The appliance is subject to a rental agreement.

6. Any defective part that has been replaced becomes the property of Arisit Pty. Limited.

7. This warranty applies only to Sirius appliances purchased and installed in Australia and New Zealand.

8. Loss of use of the appliance or consequential loss of any nature is not covered.

9. A charge may be levied at the discretion of Arisit Pty Limited if the call is deemed unnecessary or if the cause of failure is traced to external sourced such as, but not limited to: blown fused, power failure, faulty installation, customer misuse or negligence, etc

10. Where the appliance, the subject of a warranty claim or repair, is used or installed more than TWENTY (20) kilometres from the nearest Arisit Service Division or Authorised Service Agent, the cost of delivery to the nearest Service Division or travel costs for a technician or Authorised Service Agent shall be for the account of the Purchaser. Where a built-in appliance is located or installed outside the Arisit Authorised Service Agent's normal service area, additional travel and labour costs shall be the account of the

Purchaser .

11. Service is offered during normal business hours only, also appliances to have a clear access in a serviceable area

12. Arisit Pty Limited shall not under any circumstances be responsible in terms of this warranty for the replacement or repair of any part of the equipment which may have been damaged in transit, during and after installation or imperfections after installation.

13. Losses caused by act of God, failure to obtain spare parts, strikes or lockouts are not covered.

14. External off board motors must be installed a minimum of 2 metres and maximum of 7 metres away from the rangehood. This is for optimum sound and performance.

15. All motors must be accessible for servicing purposes and if installed above 2 metres from ground height additional cost will be incurred due to OH&S standards for service agents. Prior to install please check minimum & maximum installation details on the Sirius website, FAQ under support tab. We reserve the right to amend any of the above without prior notice.

16. This warranty does not affect your statutory rights.

To register your product for warranty, click the QR code or visit www.siriusbrand.com/pages/register-new-product

6 Year Warranty when Sirius ducting is used

Full replacement warranty on parts and labour. Check website for T&Cs.
10 year warranty on SEM motors.

ARISIT PTY LIMITED (Australia)
ABN 23 091 515 294
40-50 Mark Anthony Drive
Dandenong South VIC 3175
P: Sales & Service: 1300 762 219
F: Sales & Service: (03) 9768 0838
E: arisit@arisit.com

ARISIT PTY LIMITED (New Zealand)
P: (09) 306 1020
E: arisit.nz@arisit.com

Sirius
AUSTRALIA & NEW ZEALAND

www.siriusaustralia.com
www.siriusnz.co.nz

Sirius Hoods and ducting products are only available from our select group of Sirius Professional Stockists nationwide. For the latest list of Sirius Stockists near you, please refer to www.siriusaustralia.com

All efforts have been made to ensure that the information provided in this brochure is correct at the time of printing. Due to continuous product improvement and ongoing development, Sirius reserves the right to make changes to the products and technical data without prior notice.
Some products appearing in this brochure may be for illustrative purposes only. Diagrams are indicative measures only. Prior to commencing cabinetry cutouts the operating/installation instructions accompanying the product must be referred to at www.siriusaustralia.com