Italian Crafted for Australian Living

Valentina collection

LE LUCE RANGE
USER MANUAL

OFFBOARD DOWNDRAFT COLLECTION

SDD2ELEMTC58	9351116005344
SDD2ELEMTC88	9351116005351
SDD2ELEMTC118	9351116005368

Congratulations on your purchase and thank you for choosing this Sirius product.

CONTENTS

Warnings 3

Before Your Install 5

Downdraft Rangehood 6

- Rangehood Placement 7
- Ducting 8
- Installation 10
- Using the Rangehood 22

Troubleshooting 24

Exploded View & Parts List 25

Parts 28

Extractor Wiring 29

Warranty 30

WARNINGS

The air outlet of the appliance must not be connected to a flue which is used for exhausting other fumes from appliances, such as a central heating, boilers etc.

For the external exhausting of the fumes, comply with the regulations in force.

The motor of the peripheral exhausting group is powered by the cooker-hood placed in the kitchen.

Before connecting the cooker hood to the mains supply, make sure that the voltage indicated in the rating plate corresponds to the mains voltage in the home.

Before carrying out any sort of maintenance or cleaning operation, make sure that the appliance is disconnected from the electrical mains.

An appropriate maintenance ensures a good working and a good performance in the long run.

All models are built in Class I, therefore they must be earthed.

Range hoods and other cooking fume extractors may adversely affect the safe operation of appliances burning gas or other fuels (including those in other rooms) due to back flow of combustion gases. These gases can potentially result in carbon monoxide poisoning. After installation of a range hood or other cooking fume extractor, the operation of flued gas appliances should be tested by a competent person to ensure that back flow of combustion gases does not occur.

If a stationary appliance is not fitted with a supply cord and a plug, or with other means of disconnection from the supply mains, it is necessary to predict a contact separation in all poles that provide full disconnection under over-voltage Category III conditions.

Means for disconnection must be in-governance with local, state and national building regulations fixed wiring in accordance with the wiring rules.

This appliance can be used by children aged from 8 years and above and persons with reduced physical, sensory or mental capabilities or lack of experience and knowledge if they have been given supervision or instruction concerning use of the appliance in a safe way and under stand the hazards involved.

Children shall not play with the appliance.

Cleaning and user maintenance shall not be made by children without supervision.

If the power cable is damaged, it must be replaced by a cable or a special assembly, available from the manufacturer or its service department technique.

Children shall not play with the appliance.

Cleaning and user maintenance shall not be made by children without supervision.

If the power cable is damaged, it must be replaced by a cable or a special assembly, available from the manufacturer or its service department technique.

The room must have adequate ventilation when using the kitchen hood simultaneously with other appliances that use gas or other fuels (not applies to appliances that simply release the air back into the room).

There is the possibility of fire if the cleaning operations are not carried out as indicated in the instructions.

Do not prepare food over open flames as sucked flames are a risk of damage to the appliance.

ATTENTION

The accessible parts can burn if used in conjunction with the cooking appliances.

ABOUT THE DOWNDRAFT RANGEHOOD COLLECTION

It is important to keep these instructions for use with the appliance.

If the appliance should be sold or passed on to others, make sure that the instructions are passed on with it.

- This appliance is designed for normal domestic use. It is not designed for commercial or industrial use, or for purposes other than those for which it was designed.
- The appliance must be used by adults. Keep the appliance is out of reach of children and always supervise when in use. Children must not operate the controls.
- When the appliance is delivered, check the overall appearance of the packaging. Any remarks should be written on the delivery coupon, of which you keep a copy.
- Any consequences of or damage from incorrect installation or incorrect use of the appliance will not be covered by the manufacturer's guarantee.
- Do not change or try to change the characteristics of this appliance. This would be a danger and will void any warranties.
- Repairs must be performed only by an authorised technician. Always disconnect the hood before carrying out cleaning or maintenance operations.
- Adequately ventilate the room when a cooker hood and other appliances, powered by energy other than electricity, are used simultaneously, so that the hood does not suck any combustion fumes.
- Do not cook food over open flames (flambé) or operate cooktops without pots or pans on them under the hood itself (the flames sucked into the hood might damage the appliance).
- Frying with oil must be done under constant supervision as hot oils and fats may ignite
- Respect the guidelines for cleaning and replacement of grease filters. Accumulated deposits of grease are a fire hazard.
- Never use steam or high-pressure devices for cleaning your hood (regulations regarding electrical safety).
- Never use the rangehood without the grease filters in place.

In the case of the version with external motor, for normal downdraft operation, it is necessary to use an external motor made by Sirius.

- When handling the downdraft, never put your hands or other objects in the field of action of the unit.
- This appliance may be used by children aged from 8 years old if supervised. Cleaning and user maintenance must not be made by children.
- If the supply cord is damaged, it must be replaced by the manufacturer, its service agent or similarly qualified persons in order to avoid a hazard.
- If the supply cord of the appliance is provided with a cooktop, this must be easily accessible.
- You may also find these instructional materials on our websites:

www.siriusaustralia.com or www.siriusnz.co.nz

WARNING

NEVER try to extinguish a fire with water! Switch off the appliance and cover flame with a fire blanket. If necessary, call the emergency services. Ensure all flames are extinguished.

We thank you for taking note of these warnings before installing and using the appliance. They have been written for your personal safety and the safety of others.

Emergency Services Australia: 000

Emergency Services New Zealand: 111

WARNING

Failure to install the screws or fixing device in accordance with these instructions may result in electrical hazards

BEFORE YOU INSTALL - USEFUL DUCTING INFORMATION

Sirius warranty covers only Sirius product. If you choose to install a non-Sirius branded accessory such as flexible ducting, Sirius will only warrant the rangehood and motor. If installation is found to be the cause of failure or issue then charges will apply for service and parts.

Flexible ducting is not permitted under any circumstances. Flexible ducting has been found to increase noise levels, increase vibration and reduce airflow. Sirius Semi-rigid or solid ducting can be used in lieu. There is a range available to suit any application.

WARNING

The appliance must be installed and connected to the power supply only by a qualified technician.

- There should be adequate ventilation of the room when the rangehood is used at the same time as appliances burning gas or other fuels (not applicable to appliances that only discharge the air back into the room)
- The details concerning the method and frequency of cleaning
- There is a fire risk if cleaning is not carried out in accordance with the instructions
- Do not flambé under the range hood
- **CAUTION**: Accessible parts may become hot when used with cooking appliances

Ducting available at www.siriusaustralia.com and www.siriusnz.co.nz
6 Year Warranty when Sirius Ducting is used. Full replacement warranty on parts and labour.
See website for terms & conditions.
A reduction in the duct diameter from stated ducting size will void warranty.
If you are in doubt about the ducting, please contact Sirius prior to installation:
AUS - 1300 762 219 or NZ - 09 306 1020

The symbol on the product or on its packaging indicates that this product may not be treated as household waste. Instead it shall be handed over to the applicable collection point for the recycling of electrical and electronic equipment. By ensuring this product is disposed of correctly, you will help prevent potential negative consequences for the environment and human health, which could otherwise be caused by inappropriate waste handling of this product. For more detailed information about recycling of this product, please contact your local city office, your household waste disposal service or the shop where you purchased the product. This appliance is marked according to the European directive 2/96/EC on waste electrical and electronic equipment (WEEE).

Le Luce Range
Offboard Downdraft Rangehood

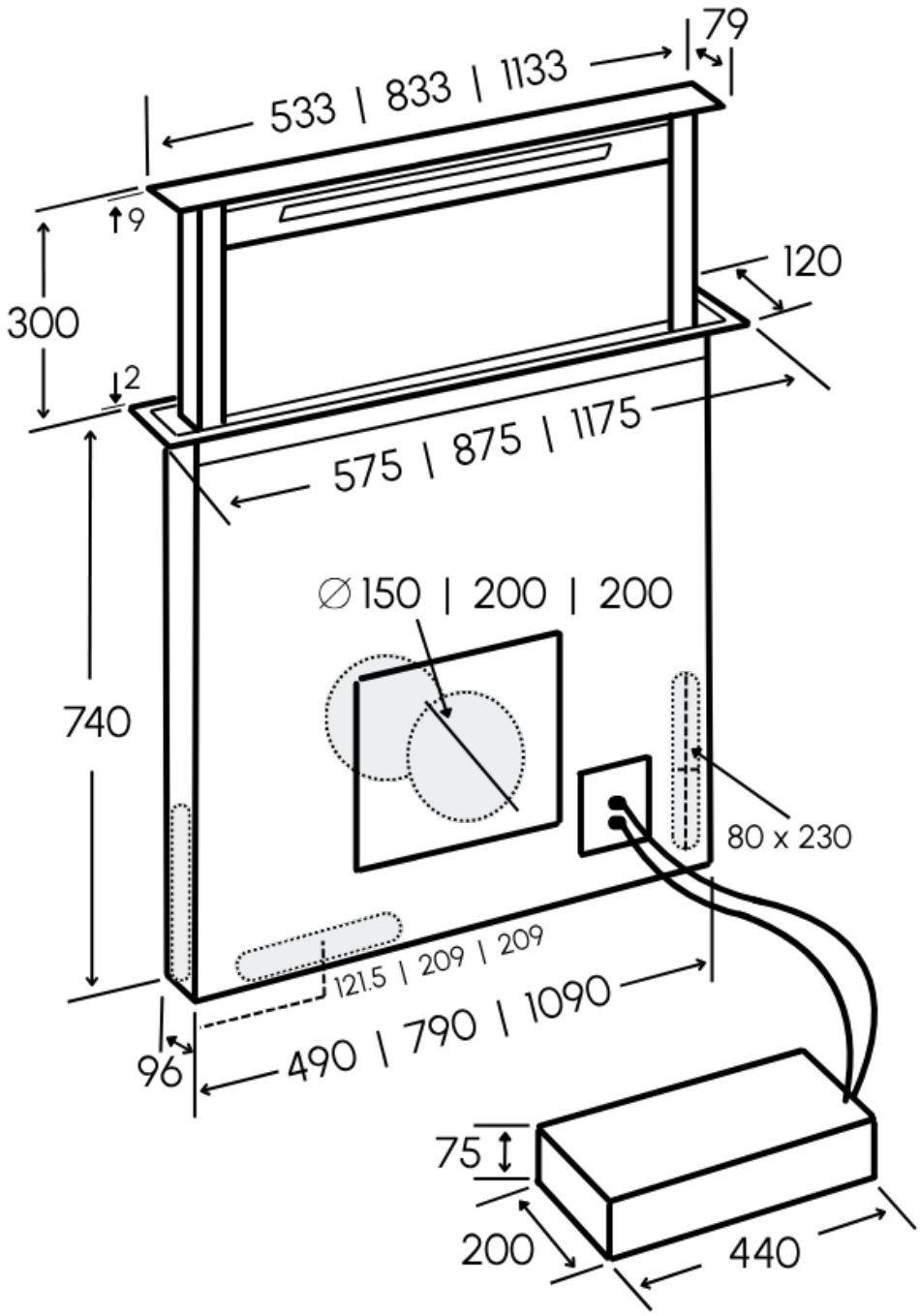

WHERE TO PLACE YOUR RANGEHOOD

Clearances

For optimal performance, it's important that your downdraft is placed in the right spot, perfectly neighbouring the cooktop.

Induction Cooktops

Because Induction Cooktops don't produce the same radiating heat as gas, and that they use magnetic fields to heat rather than open flame, the installation distances of the cooktop to rangehood is defined by the material used on the benchtop. Due to this, we recommend contacting your benchtop manufacturer to confirm the required distances for safe installation. Alternatively, a min 20mm to max 60mm between the downdraft liner and cooktop is recommended.

Gas Cooktops

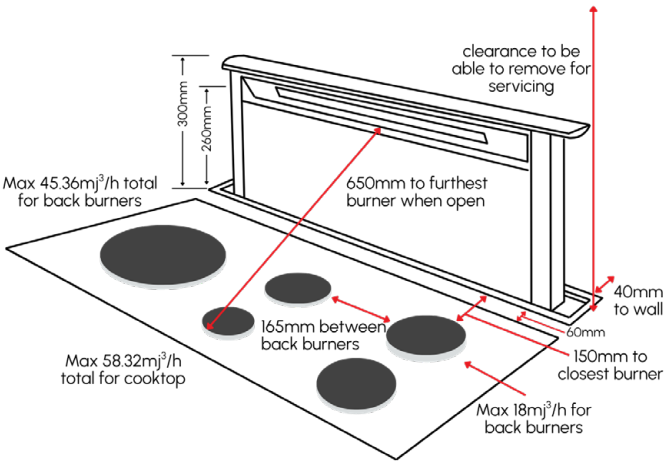

Fig.1

- The cooktop must not exceed a combined total of 58.32mj³/h
- The back burners must not exceed a combined total of 45.36mj³/h
- 150mm between the downdraft edge and the closest cooktop burner or 60mm from the downdraft edge and the cooktop frame.
- 650mm max between downdraft opening and furthest burner
- 165mm min between the back burners
- 40mm between downdraft back edge and a wall

Do not use over cooktops powered by wood or coal, or with cooktops that exceed the maximum combined power as this may damage the appliance and void warranty.

The air being drawn can't be conveyed through or into a duct used to let out fumes from appliances fed by energy other than electric power (eg. centralised heating, radiators, water heaters, etc.).

- Attention: remove any possible PVC film from the stainless steel, including the filters.
- To externally vent, please comply with the rules as set out by your governing area.
- The room must be provided with adequate ventilation when a rangehood and additional appliances are fed by energy other than electric power (gas, oil, or coal stoves, etc.) and are used simultaneously. The rangehood, when evacuating the air, could generate a negative pressure in the room which can't exceed the limit of 0.04 mbar, in order to avoid the suck of exhausts deriving from the heat source. Therefore the room should be provided with air intakes to allow a constant flow of fresh air.

Rangehood Placement

When placing your rangehood, ensure it is placed to cover the most cooktop surface as possible.

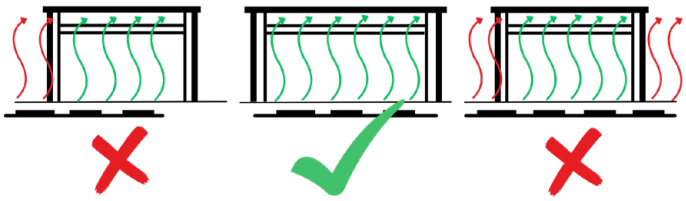

Fig.2

Using a rangehood that is smaller than the cooktop may void the warranty and will result in a poor performance. The rangehood needs to be adequately sized to effectively capture and remove smoke, steam, and cooking odours.

For optimal performance, it is crucial to match the rangehood size to the cooktop. This ensures the cooking area is covered and extraction is being pulled from correct area.

Adequate clearance between the downdraft and upper cabinetry or shelving to be able to remove the downdraft for servicing

For more on rangehood placement, visit our website

WARNING

If the rangehood positioning exceeds the recommended measurements, warranty may be compromised as performance of the rangehood will be affected.

Downdraft Ducting Solutions

There are several ways to duct and vent a downdraft, and this needs to be sorted before installation to ensure you're allowing for the right setup. Will it be under the floor, through the wall, or recirculated? There are five options to vent out of the unit, front, back, side, bottom or side. A minimum of 2 meters is the optimal length of duct for the best airflow at minimal noise.

CHOOSE YOUR MOTOR

For downdrafts, there is the specially designed Front Mounted (DDFMEL), or the SEM12ELA motors, or you can choose the standard Internal Inline (SEM11 or 81) or External Wall Mounted (SEM21 or 71). Check the products specification sheet to see which motor suits that model. Knowing which motor to use will help in choosing how you'll duct the hood.

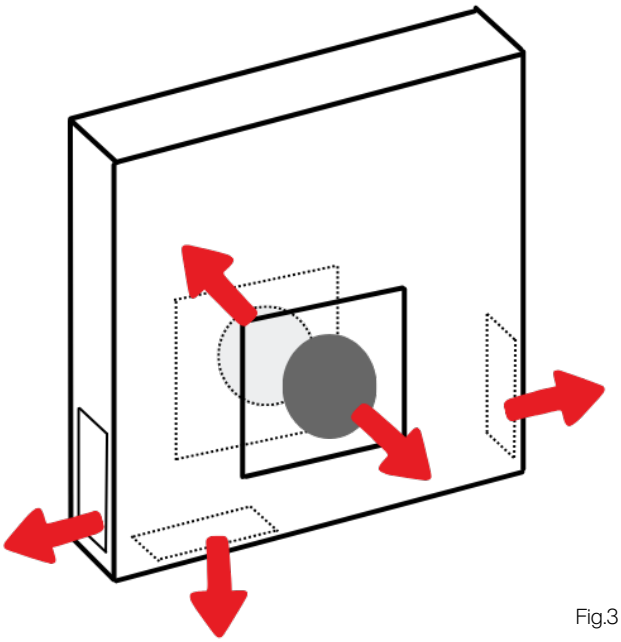

Fig.3

When ducting your downdraft, it's important to avoid flexible ducting. Flexible ducting can increase movement which increases noise, and can reduce extraction power.

Downdraft rangehoods have the option of being recirculated. With recirculated rangehoods the air is passed through the rangehood filter and then blown back into the room and come with a carbon filter to help clean the air that's being recirculated.

While we do not recommend recirculating your downdraft, this is often a good option for small spaces, or if you're unable to duct your rangehood outside, making it ideal for apartments or homes without an external venting option.

Note:
A rangehood and a SEM11, 21, 71 or 81 motor cannot be installed back-to-back. We recommend a minimum of 2 metres between rangehood and motor for best performances and noise reduction reasons.

- Use ducting within the min/max specifications
- Use ducting of the shortest possible length
- Limit the number of ducting bends
- Only use materials approved by standards and regulations
- Do not make any changes in ducting diameter (recommended constant diameter: Ø 150 mm / Ø 200 mm or equal surface area).

6 Year Warranty
when Sirius ducting is used

DUCTING OUT OPTIONS

Ducting out is the optimal option if you want great air movement and low noise. When ducting, remember that the front and back with the DDFMEL motor are round exits, and the sides and bottom are rectangular. By using a straight to round adapter, you can use any type of ducting for your installation needs.

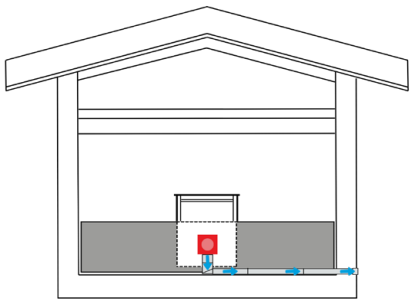

DDFMEL Motor - Ducting down and out through an external wall

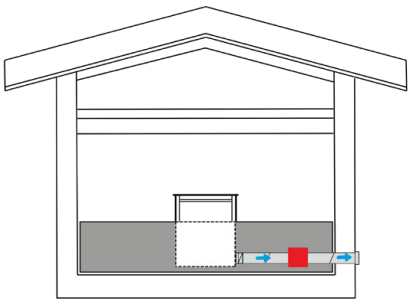

SEM11/81 Motor - Ducting out a side, to the motor and out an external wall

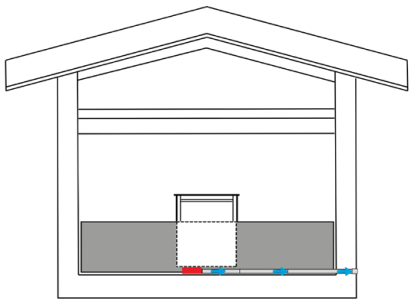

SEM12 Motor[1] - Specially designed to duct out the base of the unit then through an external wall

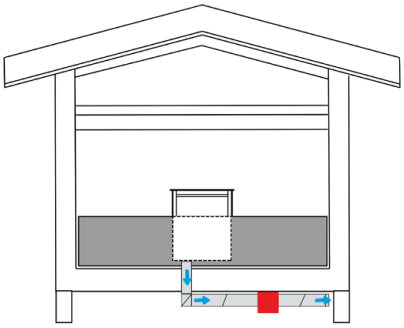

SEM11/81 Motor - If your house is elevated, duct down through the floor to the motor and out

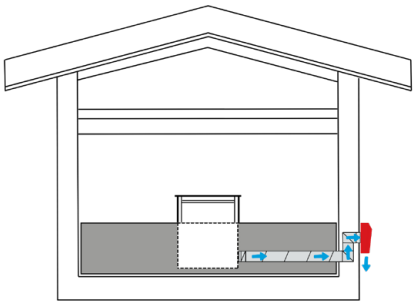

SEM21/71 Motor - duct from the units side, through the cabinet, out the wall, to the external wall motor

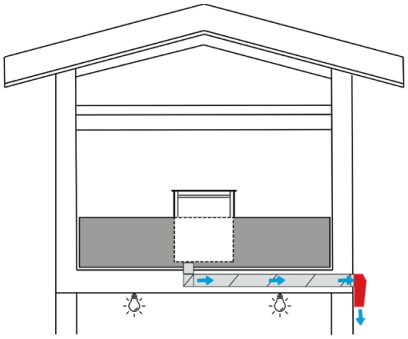

SEM21/71 Motor - for 2nd level, duct across to the external wall (through the floor or cabinet) to the external wall motor (must be accessible)

RECIRCULATING OPTIONS

Recirculated is when the air is passed through the rangehoods charcoal filter, through the ducting and blown back into the room. This is a good option for small spaces, or if you're unable to duct your rangehood outside, making it ideal for apartments or homes without an external venting option. With recirculating, note that you loose approx. 15% air movement due to the additional charcoal or carbon filters required.

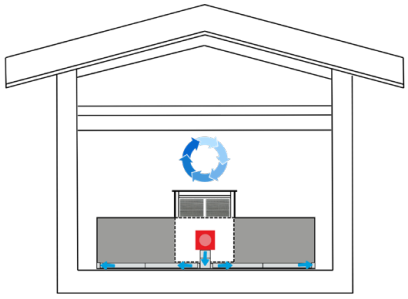

DDFMEL Motor - Ducting down and out both sides of the cabinet with a T connector

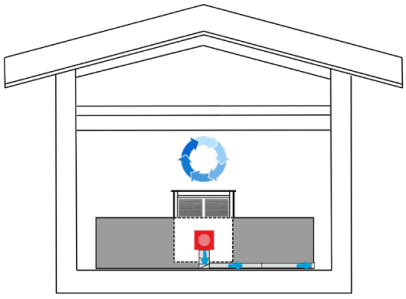

DDFMEL Motor - Ducting down and out through the side of the cabinet

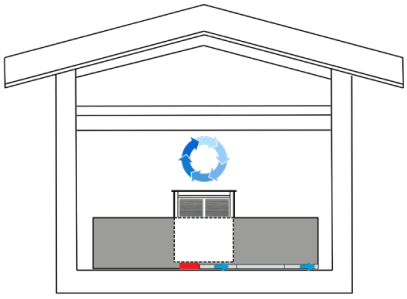

SEM12 Motor[1] - Specially designed to duct out the base of the unit then out the side of the cabinet

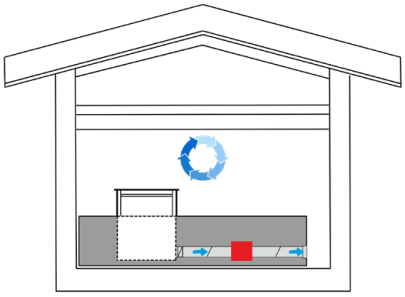

SEM11/81 Motor - Ducting out the side of the unit and out through the cabinet

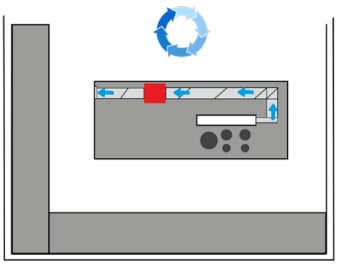

Island Ducting - Duct from the units side, through a SEM11/81 motor and out the island

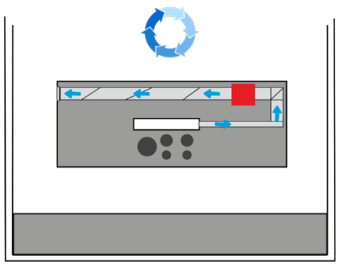

Island Ducting - Duct from the units side, through a SEM11/81 motor and out the island

[1] not suitable for 1180mm width models

BEFORE YOU INSTALL - USEFUL INSTALLATION INFORMATION

For even better performance especially for cooking with multiple burners and strong odours, it may be recommended to use a rangehood larger then the cooktop area. Please also note Induction cooktops produce 50% more condensation then gas so please also take this into consideration when choosing the best rangehood for your kitchen.

Before installing the rangehood, it is essential to take into account the depth of the benchtop and overhead cabinetry or other obstacles which may affect the operation or maintenance of the rangehood. The benchtop must adequately fit the cooktop and rangehood and adhere to the minimum requirements.

This information serves as a general guide; the diagrams are not to scale and may not cover all situations.

If the rating label on the rangehood shows the symbol ⧈ the appliance is built in Class II° and it **does not need** any earth connection.

If the rating label on the rangehood does not show the symbol ⧈ the appliance is built in Class I° and it **does need** the earth connection.

When performing the electrical connections on the appliance, please make sure that the current-tap is provided with earth connection and that voltage values correspond to those indicated on the label placed inside the appliance itself.

Before carrying out any cleaning or maintaining operations, the appliance needs to be switched off. If the appliance is not provided with a non-separable flexible cable and plug, or with another device ensuring omnipolar disconnections from the grid, with an opening distance between the contacts of at least 3mm, then such disconnecting devices must be supplied within the fixed installation. If the fixed appliance is endowed with a supply cord and a plug, the appliance has to be put in a place where the plug can be reached easily.

The use of materials which can burst into flames should be avoided in close proximity of the appliance. When frying, please pay particular attention to fire risk due to oil grease. Being highly flammable, fried oil is especially dangerous. Do not use uncovered electric grills. In order to avoid possible fire risk, all instructions for grease-filter cleaning and for removing eventual grease deposits should be strictly followed.

Before installing the appliance, make sure that none of the parts are damaged in any way. In case of damaged parts, contact your retailer and do not proceed with installation. Read all of the following instructions with care before installing the appliance.

Before the installation of the downdraft, please remove the safety piece you can see in the picture (Fig.4). Leave all other protective tape in place at this point. Furthermore, please read carefully all of the following installation instructions.

Fig.4

The optimal distance from the rangehood to the motor is between 2 to 5 meters with a maximum of 7 meters.

The ducting to and from the motor should have minimal bends for the best air movement and lowest noise. Each 'elbow' reduces air capacity by 1 linear meter. Avoid 90º bends and use 45º instead.

We recommend a maximum of 5 meters ducting from the motor to the atmosphere.

580mm model uses 150mm ducting. 880mm and 1180mm use 200mm ducting. Use constant diameter throughout ducting.

Use ducting approved by standards enforced - see our website for approved ducting The manufacturer shall not be deemed responsible for air capacity or noise problems caused by failure to comply with the above instructions and no warranty on the product shall be provided.

DOWNDRAFT RANGEHOOD INSTALLATION

Step 1

Refer to cutout dimensions required as each unit varies.

1. Ensure there's adequate space inside the cabinet below the countertop to hold the rangehood cassette. Note you may need additional space to allow for a Front Mounted (DDFMEL) motor.
2. Before making the cutout, check that there are no structural or other parts inside the cabinet where the appliance is to be placed which could hinder a proper installation. Check that the dimensions of the downdraft and the cooktop are compatible with the cabinet so that the installation can be carried out properly.
3. Carefully cut the opening in the countertop. Ensure any debris, shavings and dust are removed before proceeding. Cutout dimensions are as follows:

- 542mm x 100mm for the 580mm model
- 842mm x 100mm for the 880mm model
- 1142mm x 100mm for the 1180mm model

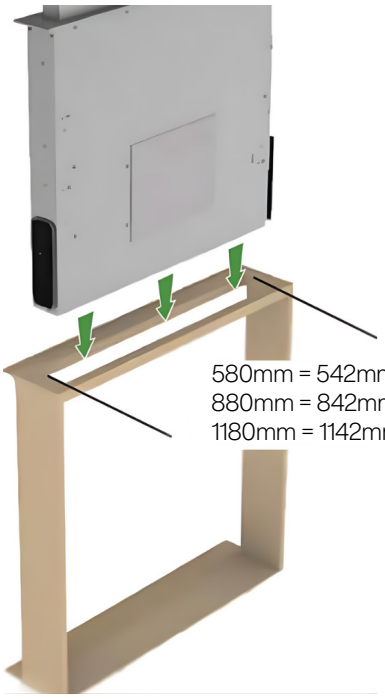

Fig.5

Step 2 - Installation for Side & Bottom Venting - see page 13

Step 2 - Installation for Front & Back Venting - see page 16

WARNING

The rangehood is quite heavy, so two people will be needed for installation.

WARNING

Technical specifications and product sizes can be varied by the manufacturer without notice. Cut out dimensions are indicative only and physical measurement should be taken as a precautionary measure to ensure no issues arise with fitment.

Caution:
Before connecting any ducting to the motor, make sure the non-return valves, located on the air outlet of the motor, can swing open.

INSTALLATION INSTRUCTIONS FOR SIDE & BOTTOM VENTING

Step 2

Remove front adaptor plate - Part D (Fig.6)

Replace the adaptor plate - Part D - with the front cover plate - Part E

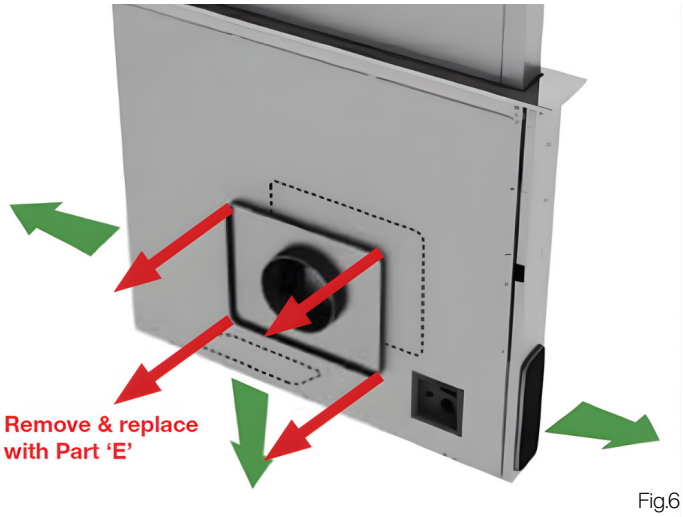

Fig.6

Step 3

Remove side or bottom cover plate - Part C (Fig.7)

Connect air outlet collar - Part B - to the same fixing points as removed from side or bottom cover plate - Part C - and tighten.

Fig.7

Step 4

- Carefully lower downdraft into cutout cabinetry.
- Attach the fixing brackets - Part F - to the bottom sides of the downdraft unit and the cabinet base. Wait to fully tighten until the unit is in the perfect position with the countertop. Additional brackets may be required for wider units and are fixed to the top of the unit and to the sides of the cabinet.
- Insert the brackets in the lower side of the downdraft in such a way that there is a 2 mm distance between the lower side of bracket and the bottom of the cabinet. This distance will allow the traction to be positioned downwards of the product, at the moment of fixing, in order to have the stainless steel trim perfectly adhering with the work surface. (Fig.8)

Fig.8

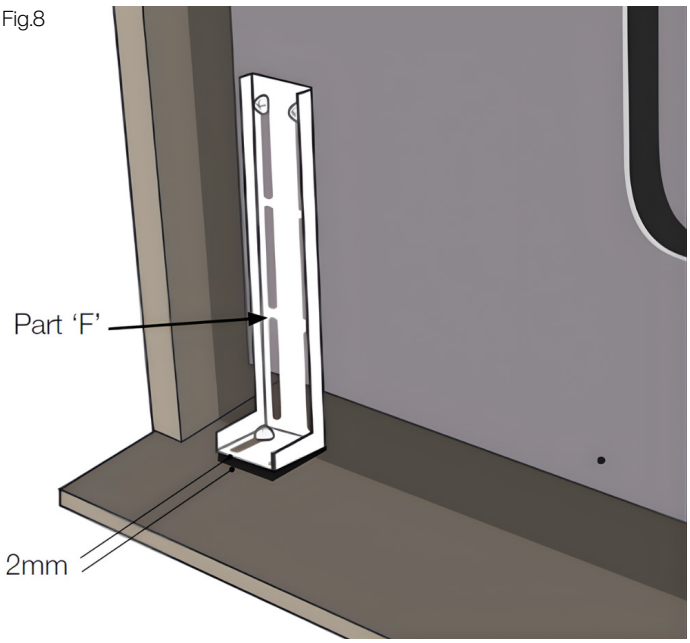

- Use a spirit level to ensure that the unit is perfectly level and plumb with the countertop. For the Le Luce, you want the trim and glass top sitting just on top of the countertop.
- When the unit is in the perfect position, tighten the screws at the bottom of the unit to secure it in place.

Step 5

Using the supplied components, connect your ducting to the unit.

Duct tape may be used to secure joints and ensure there are no gaps (Fig.9).

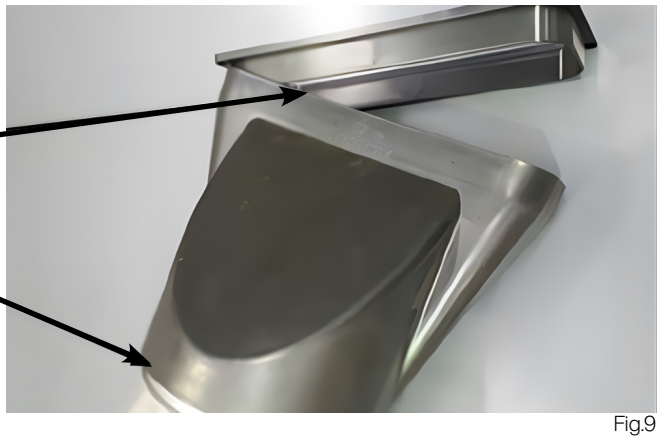

Fig.9

Step 6A - Duct to SEM11 & SEM21 Motors

This step covers ducting for 580mm model only with 150mm ducting. For 880mm & 1180mm models, see Step 6B.

1. Connect the top of the 150mm connector piece - Part I - to the round outlet on adaptor - Part A - then connect length of 150mm ducting - Part K.1 - to the bottom of the 150mm connector piece - Part I.
2. Secure ducting - Part K.1 - to the motor with a universal ring clamp - Part G.
3. For SEM11, continue duct on the other side of the motor to external wall to connect to the external vent. Secure with a ring clamp - Part G.

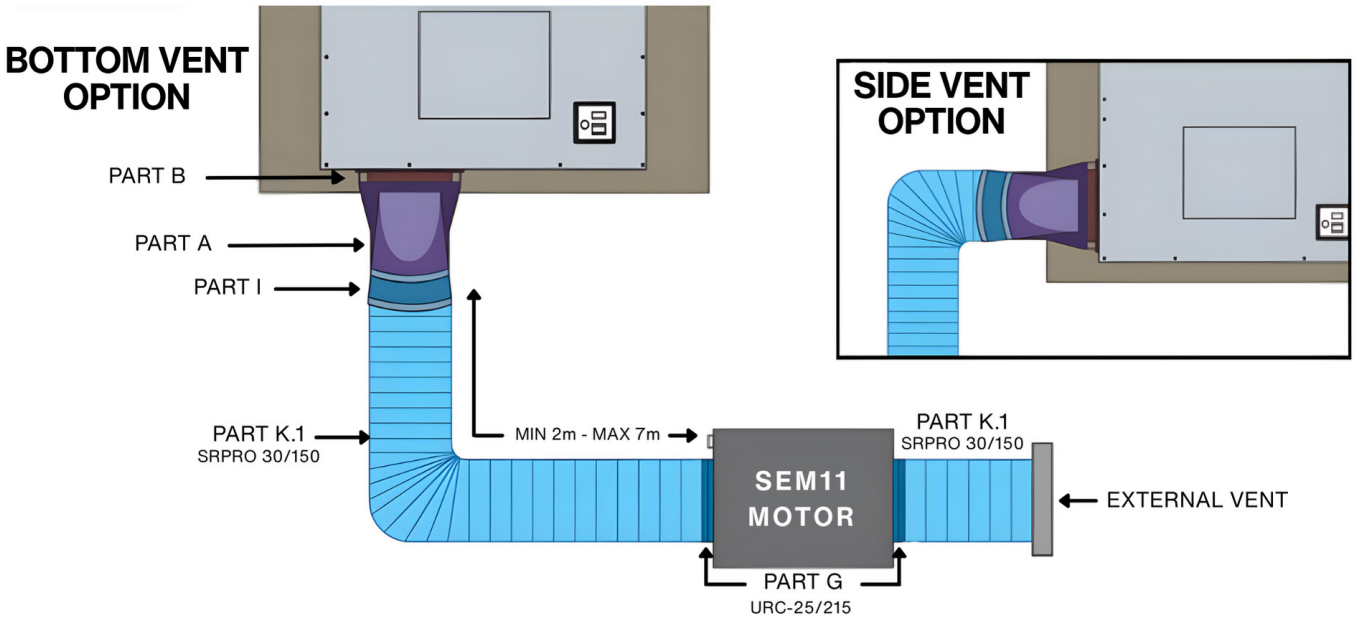

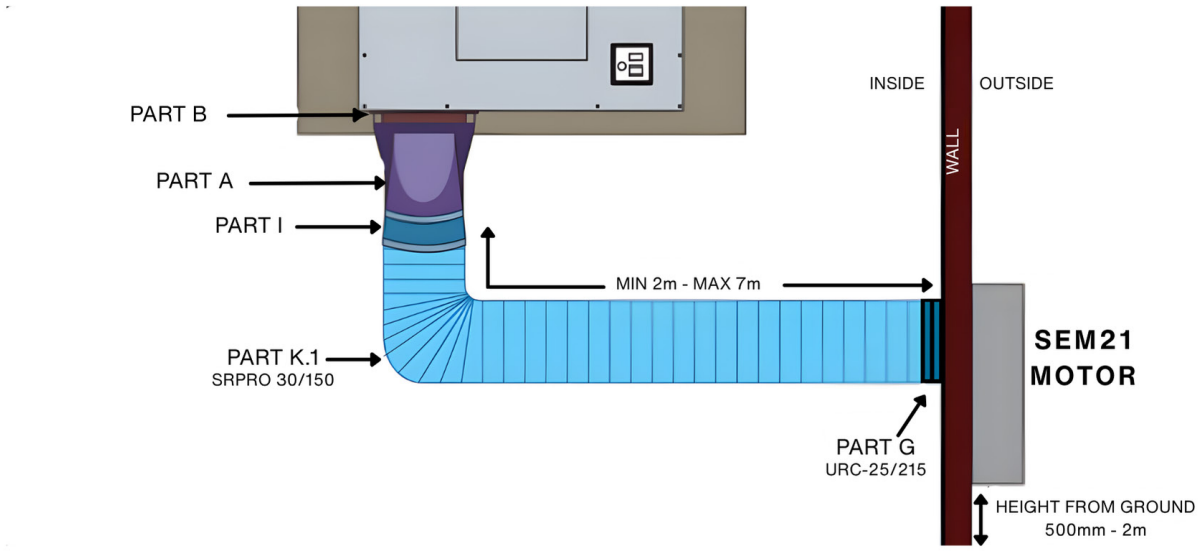

Step 6B - Duct to SEM71 & SEM81 Motors

This step covers ducting for the 880mm and 1180mm models. For the 580mm model, see Step 6A.

1. Connect a duct expander - Part H - to rectangular to round adapter - Part A - then connect length of ducting - Part K.2 - to the 200mm outlet.
2. Secure to the motor with a universal ring clamp - Part G.
3. For SEM81, continue duct on the other side of the motor to external wall to connect to the external vent. Secure with a ring clamp - Part G.

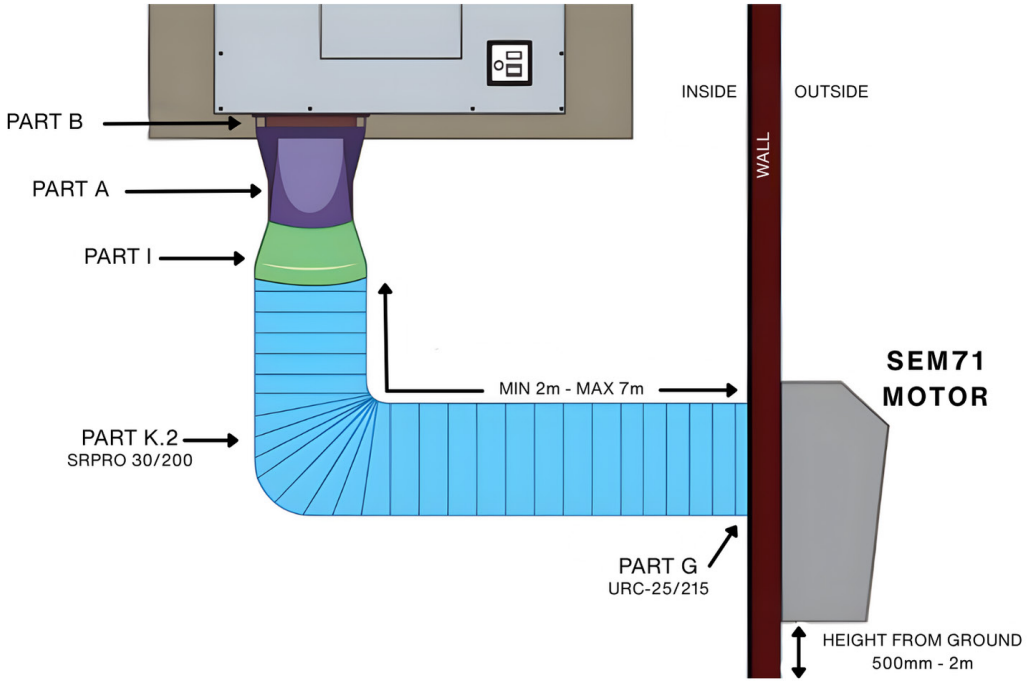

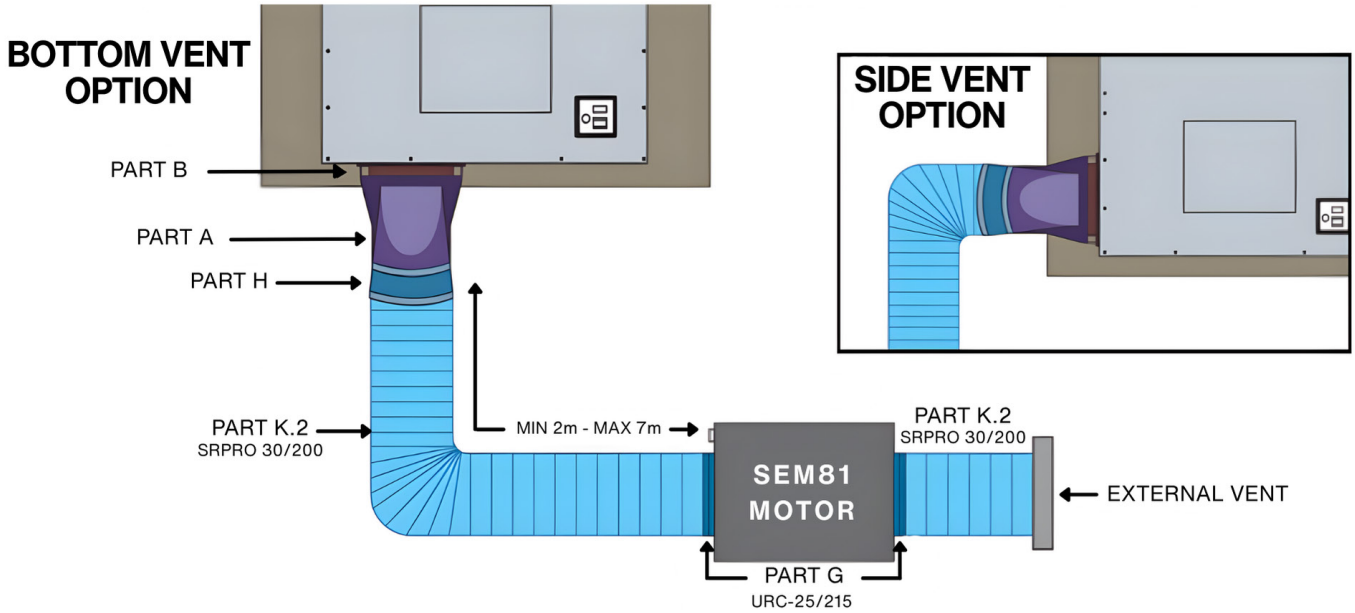

Step 6C - Duct to SEM12ELA Motor

Only suitable for the 580mm and 880mm models. Suitable for rectangular ducting.

This installation method is an easy install which sits at just 10cm tall, allowing it to easily fit under standard cabinetry
kickers and can be ducted directly outside of your kitchen

1. The inlet connector can be switched around so that the outlet on the motor can point towards the direction of your air outlet.
2. Connect a rectangular duct length - Part L - to the air outlet in the motor.
3. Connect to the external vent. Secure with a ring clamp - Part G.

Fig.10

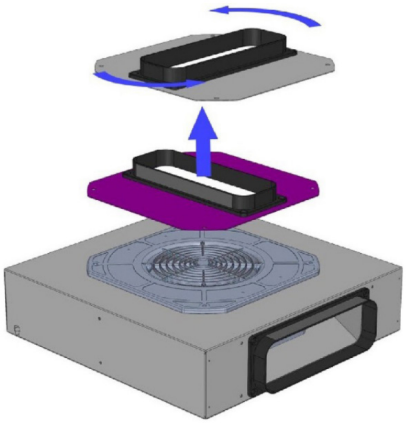

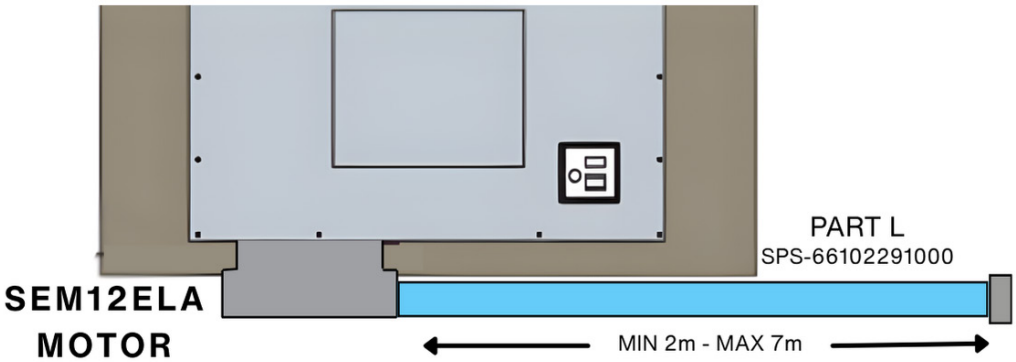

INSTALLATION INSTRUCTIONS FOR FRONT & BACK VENTING

Step 2

If venting from front, check to see if front adaptor plate - Part D - is attached.

If venting from the rear, remove 150mm or 200mm adaptor plate - Part D - and replace with front cover plate - Part E (Fig.11).

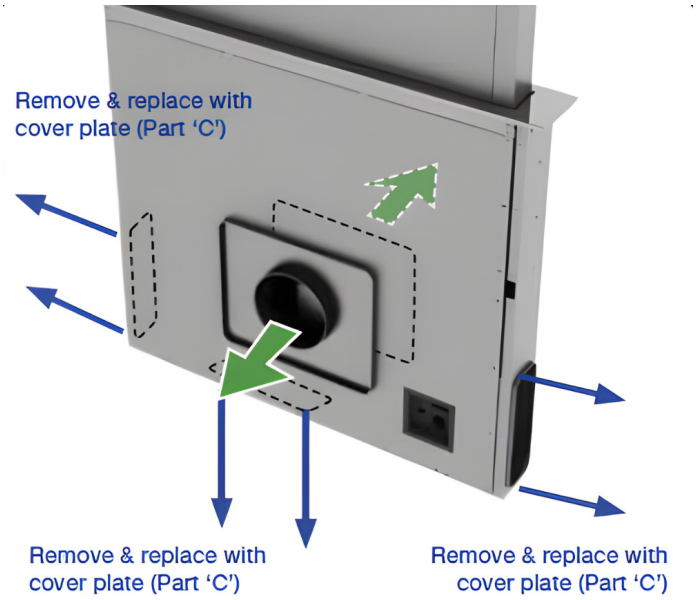

Fig.11

Step 3

Fix cover plates - Part C - to sides and bottom vents.

Step 4

- Carefully lower downdraft into cutout cabinetry.
- Attach the fixing brackets - Part F - to the bottom sides of the downdraft unit and the cabinet base. Wait to fully tighten until the unit is in the perfect position with the countertop. Additional brackets may be required for wider units and are fixed to the top of the unit and to the sides of the cabinet.
- Insert the brackets in the lower side of the downdraft in such a way that there is a 2 mm distance between the lower side of bracket and the bottom of the cabinet. This distance will allow the traction to be positioned downwards of the product, at the moment of fixing, in order to have the stainless steel trim perfectly adhering with the work surface. (Fig.8)

Fig.8

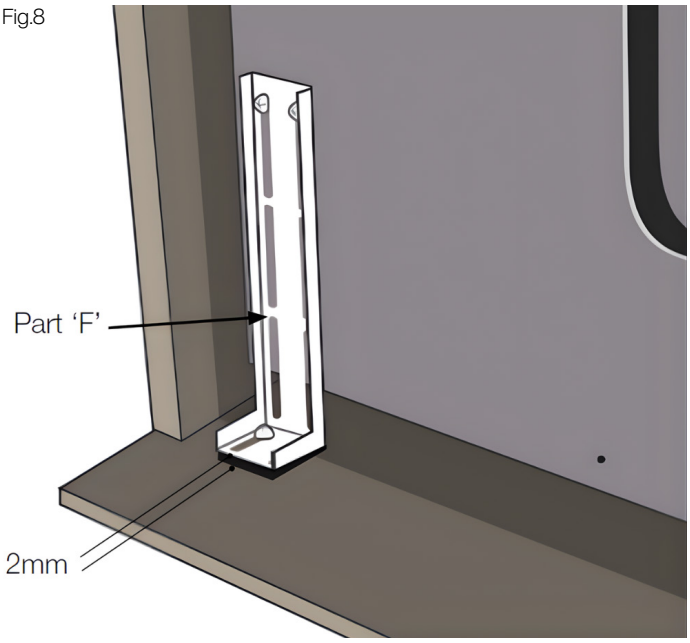

- Use a spirit level to ensure that the unit is perfectly level and plumb with the countertop. For the Le Luce, you want the trim and glass top sitting just on top of the countertop.
- When the unit is in the perfect position, tighten the screws at the bottom of the unit to secure it in place.

Step 5

Using the supplied components, connect your ducting to the unit.

Duct tape may be used to secure joints and ensure there are no gaps

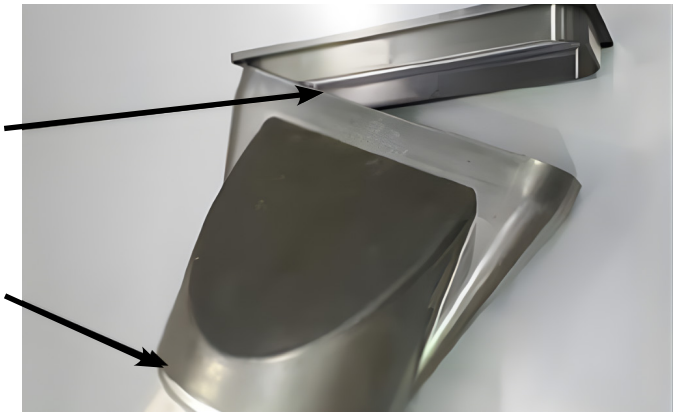

Step 6D - Duct to SEM11, SEM81, SEM21 & Sem71 Motors

Use 150mm ducting - Part K.1 - for 580mm model or 200mm ducting - Part K.2 - for 880mm and 1180mm models

1. The ducting fits directly onto the collar on the front and back adaptor plates - Part D.
2. Fix in place using a universal ring clamp - Part G.
3. For SEM11 & SEM81, continue duct on the other side of the motor to external wall to connect to the external vent. Secure with a ring clamp - Part G.

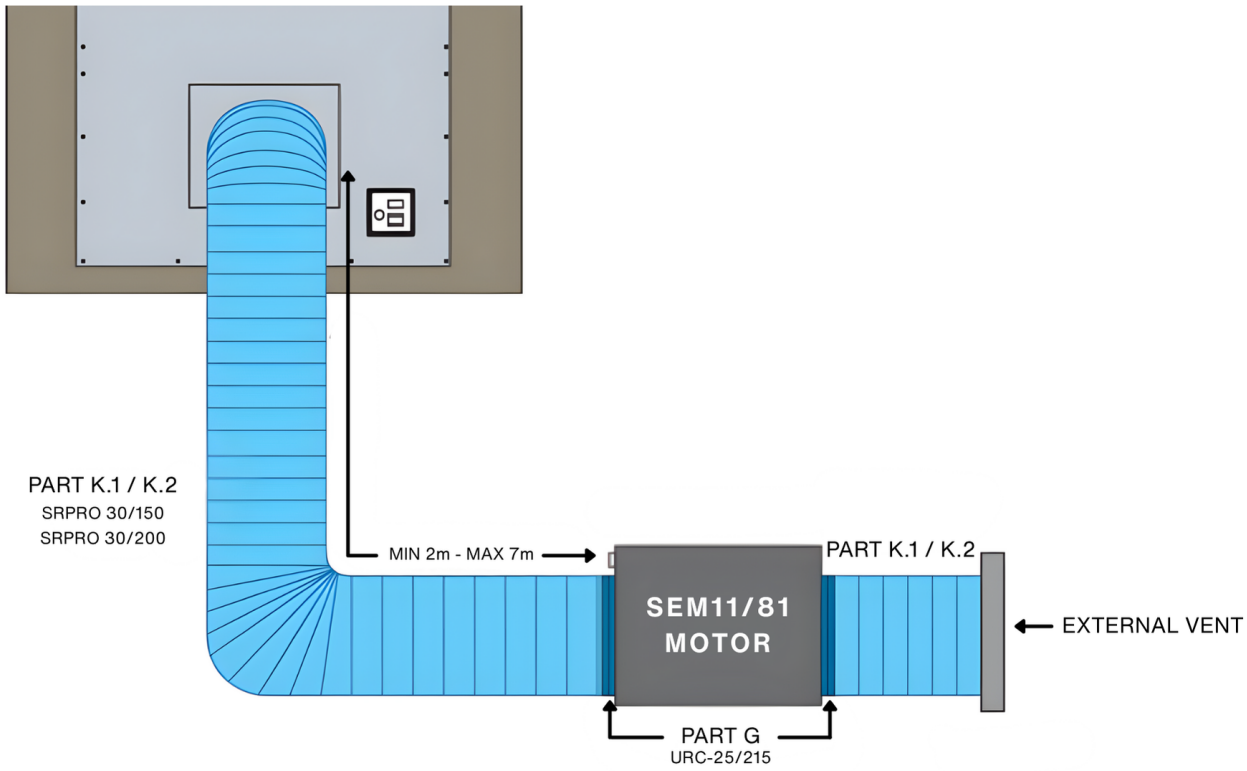

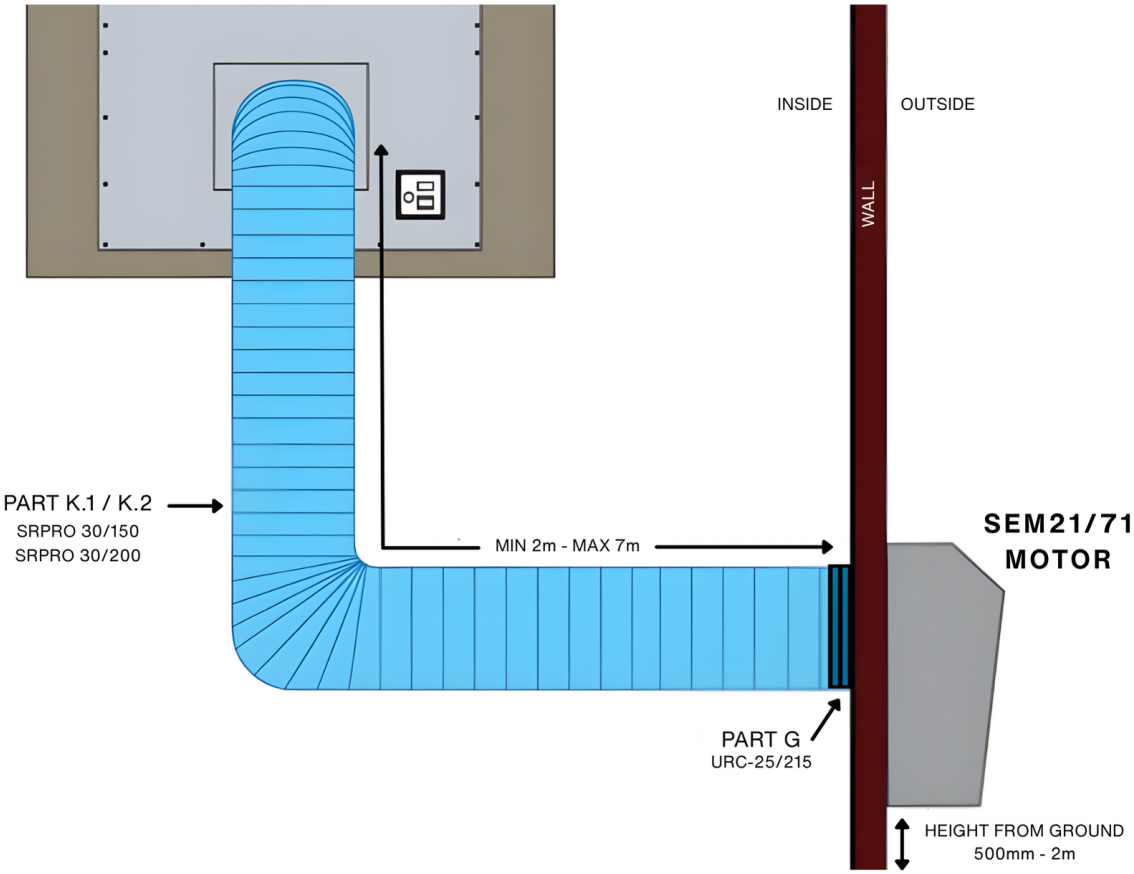

Step 6E - Duct to DDFMEL Motor

1. Use 150mm ducting - Part K.1 - for 580mm model or 200mm ducting - Part K.2 - for 880mm and 1180mm models
2. Secure ducting to the motor using a universal ring clamp - Part G. If required for the 200mm, use a Duct Expander - Part H.
3. Connect to the external vent. Secure with a ring clamp - Part G.

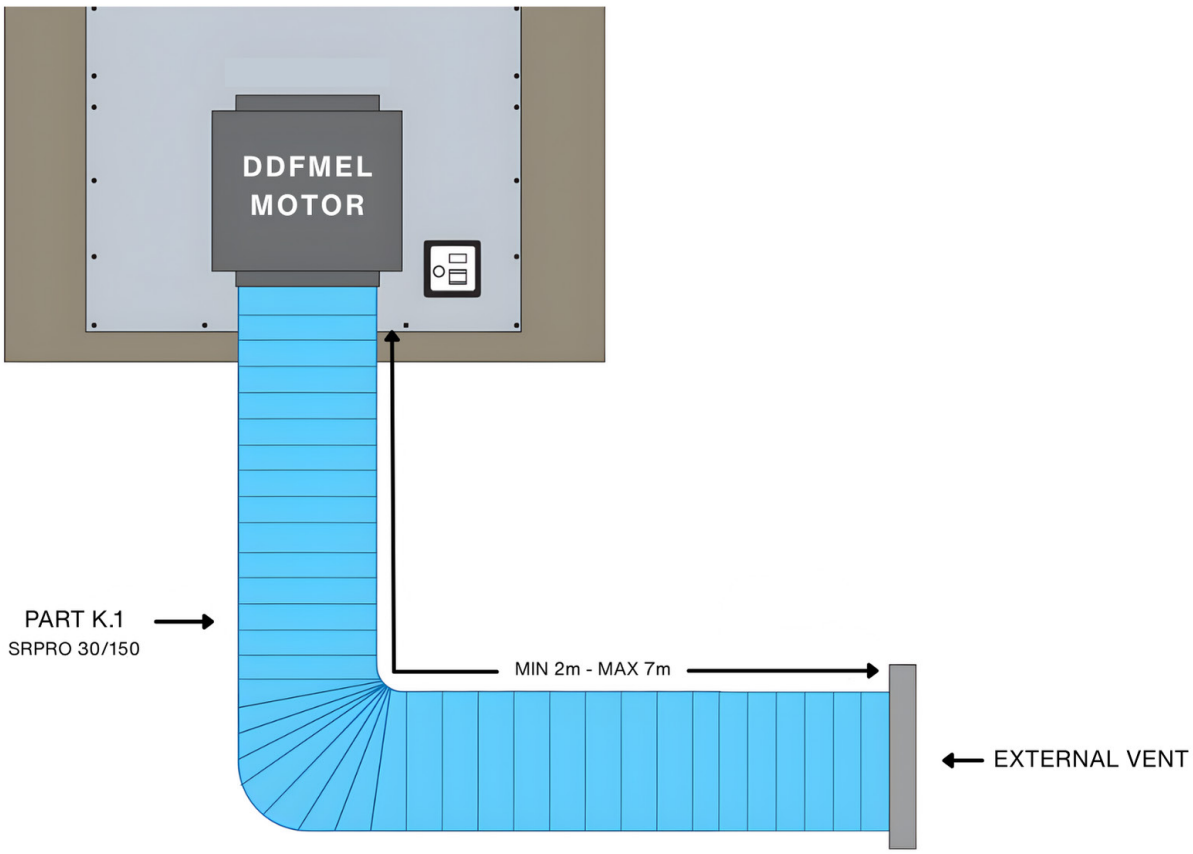

Step 7 - DUCTING FROM MOTOR TO WALL VENT: (SEM11 & SEM81)

1. Run the length of ducting to the motor. (Additional lengths of ducting can be attached using an additional internal connector pieces.)

NOTE: No connector required as it connects directly to the collar of the motor.

2. 2. Secure with another universal ring clamp (Part 'G').

NOTE: The location of the motor is to be no less than 2 metres away from the downdraft. Failure to do so may result in additional noise level of the downdraft. Maximum distance is 7 metres, however 3 - 5 metres is optimum to minimise noise and maximise performance.

3. 3. Using another length of semi-rigid duct run from the exit collar on the SEM 11 / SEM 81 to a predetermined exit point and connect to weatherproof vent with a clamp.

See www.siriusaustralia.com or www.siriusnz.co.nz for multiple vent options or see our nearest retail partner.

ELECTRICAL CONNECTION

Power transformer can be located anywhere beneath the bench and must be accessible for servicing.

We recommend installing the power transformer at least 10 cm above floor level and at a suitable distance from all heat sources (e.g. oven sides or cook top).

WARNING

Place the power transformer at a distance of no less than 65 cm from gas cooktops.

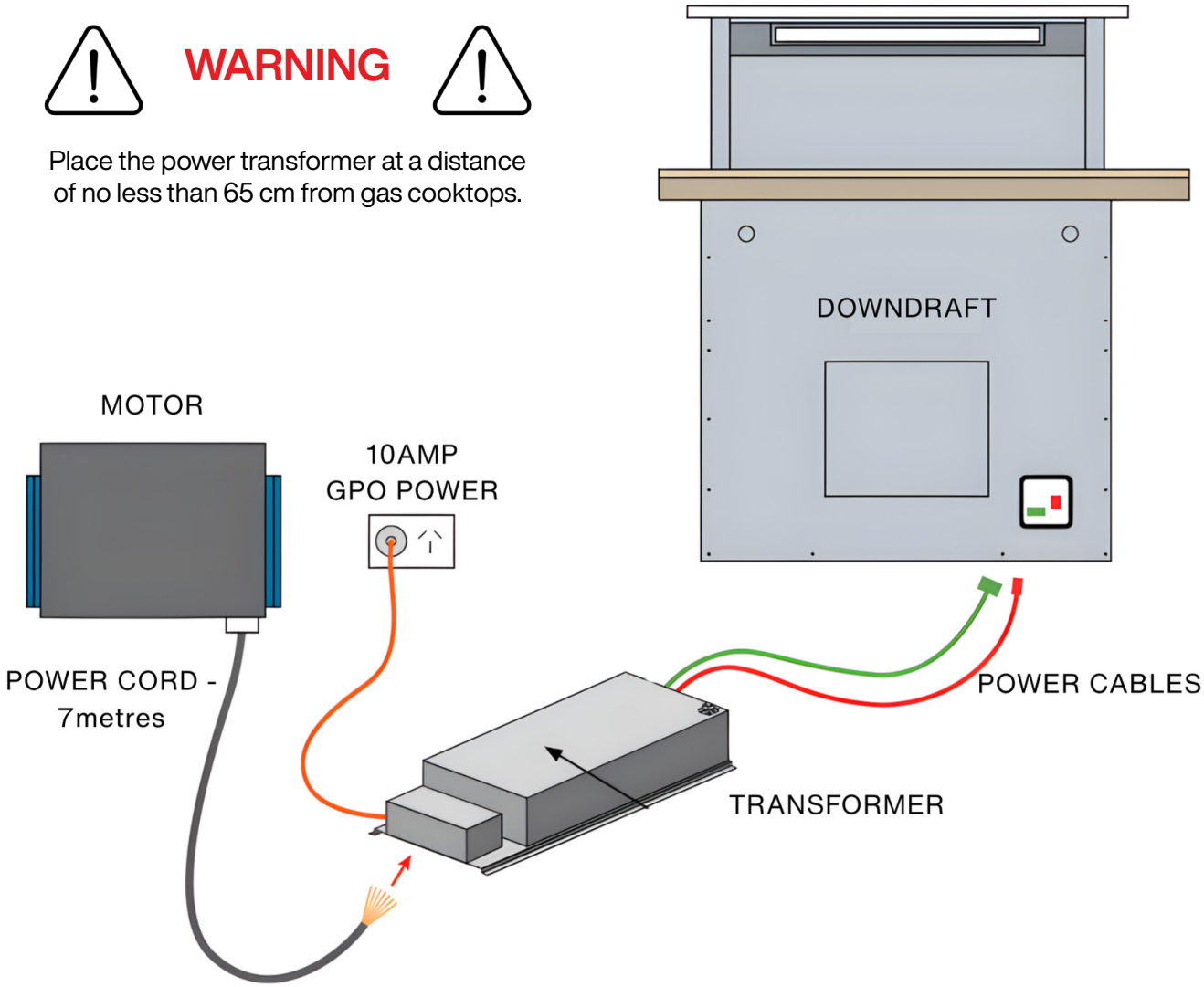

This appliance complies with the European Directives 2006/95/EC (Low Voltage Directive) and 2004/108/EC (Electromagnetic Compatibility).

While installing the appliance and carrying maintenance operation, make sure it is disconnected from the electrical network or the fuses are cut out or removed. Check that:

- Power is connected.
- Feeder lines (mains) are in good conditions.
- The cables diameter complies with installation regulations.

WARNING

The downdraft connection to the electrical network must be carried out only by professional and qualified technicians. The downdraft must be connected to a properly installed and suitable electrical network. The electrical system must comply with VDE0100 standard.

WARNING

If the rangehood presents any anomaly, disconnect the appliance or remove the fuse corresponding to the appliance power disconnecting line. If the appliance has no plug or if the plug is not easily accessible, then a device needs to be fitted to disconnect off from the electric network; this device must have an opening distance between contacts on all poles of at least 3 mm.

MAINTENANCE

CAUTION

This appliance is fitted with an H05 VVF 3 conductor, 0.75 mm2 (neutral, phase, and ground) power cord. This can be connected up to a 220 - 240 V monophase electrical network through a CEI 60083 approved power socket (10AMP power socket), which must remain accessible after installation, in compliance with installation regulations. We decline any responsibility in case of accidents caused by a lack of ground connection or incorrect ground connection. The appliance must be fed through a differential protection device (RCD), with a nominal residual current not exceeding 30mA. If the power cord is damaged, call the after-sales service to avoid any risk.

Accurate maintenance guarantees good functioning and long-lasting performance.

Particular care is due to the grease filter panel. It can be removed by pushing its handle toward the back side of the rangehood and pulling the filter downwards so to unfasten it from its slot. To insert the filter just perform the opposite operation.

After 30 hours of operation, the buttons on the control panel will flash, signaling the filters are due for cleaning. Press the timer button to reset. The grease filter needs cleaning by regular hand washing or in dishwashers every two months at least, depending on its use.

Filters may require cleaning sooner if frequent heavy frying is done.

To clean the appliance itself, water and detergent are recommended, while abrasive products should be avoided. For steel appliances specialised detergents are recommended (please follow the instructions indicated on the product itself to obtain the desired results).

WARNING

If the supply cord is damaged, it must be replaced by the manufacturer or its service agent or a similarly qualified person in order to avoid a hazard.

To change the filters, raise the downdraft, pop open the front stainless steel panel and ease the filters out. Filters can be cleaned in the dishwasher. (Fig.12)

Filters must be replaced before next use.

Fig.12

Water splashing against the enclosure from any direction shall have no harmful effect, utilizing either: a) an oscillating fixture, or b) A spray nozzle with no shield. Test a) is conducted for 10 minutes. Test b) is conducted (without shield) for 5 minutes minimum.

Oscillating tube: Test duration: 10 minutes, or spray nozzle (same as IPX3 spray nozzle with shield removed).

REPLACING THE LED LIGHT STRIP

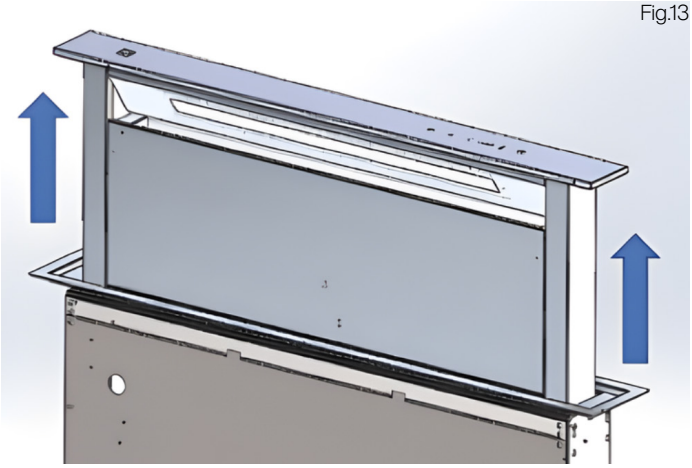

Fig.13

Lift the unit, then press the red button on the power transformer - cutting power to the unit.

By using appropriate tools - remove the LED light from its slot disconnect it electronically through the appropriate connector then replace it with a LED bar with same characteristics. (Fig.14)

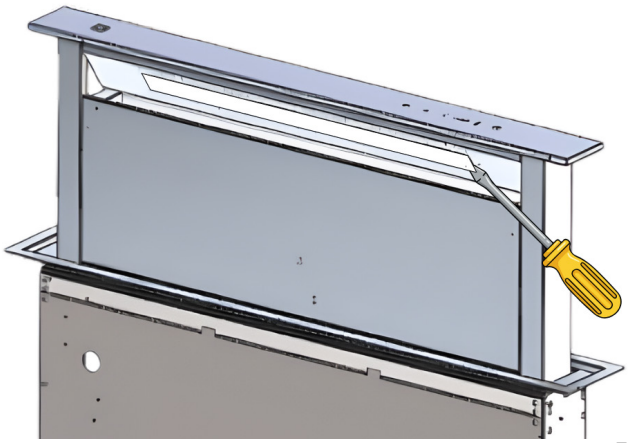

Fig.14

- To find the correct LED light, please contact Sirius directly on 1300 762 216.
- NB: light is easier to remove from the centre of LED strip. Use a small, flathead screwdriver, palette knife or blunt butter knife.

AFTER SALES SERVICE

Any maintenance operation on your appliance should be carried out by either Arisit Pty Ltd, or a qualified professional technician, authorised for that brand if out of warranty.

Contact www.siriusaustralia.com 1300 762 219

NOTE

When calling, please mention the appliance details: Production date, (Fig.15a), Type (Fig.15b) and equipment (Fig.15c).
This information is mentioned on the rating label and the production date one placed on the lower side of the downdraft.

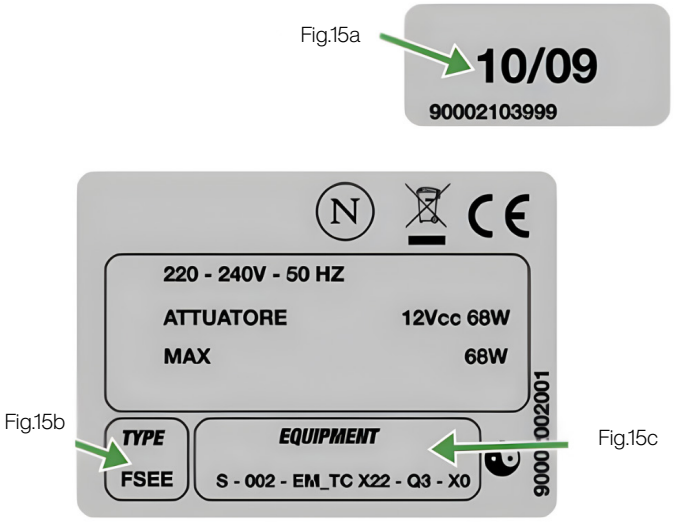

USING THE RANGEHOOD

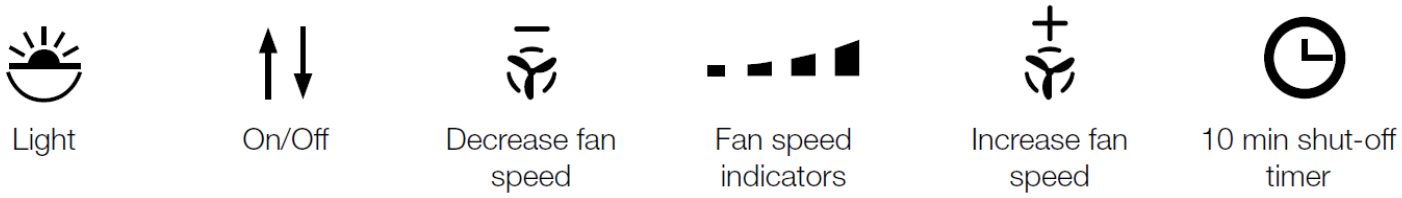

LIGHT BUTTON

The light switches on and off only when the rangehood is fully OPEN.

Pressing this button with the carriage closed will cause the carriage to open and then the light will switch on .

The button also serves to switch off the light if it is on.

ON / OFF BUTTON

This starts the extraction carriage upward movement and when it is fully open, it sets the second extraction speed.

With the carriage open: it switches off the motor and if on, the light; then it retracts the extraction carriage.

DECREASE FAN SPEED BUTTON

This reduces the speed of the extractor motor from the 4th speed until the motor switches off, without closing the pullout carriage.

FAN SPEED INDICATORS

This signals the speed setting.

When all lights flash it's a reminder to wash mesh grease filters. (see grease filter saturation)

INCREASE FAN SPEED BUTTON

This increases the speed of the extractor motor, from 1st to 4th speed, without moving the extractor panel.

10 MINUTE SHUT-OFF TIMER

10 min after setting, it serves to stop the extractor motor, close the carriage and switch the lights off, if they are on. The set function is signaled by the flashing LEDs for the set speed. The timer can be cancelled by pressing the key again.

AUTOMATIC TURN OFF:

After 4 hours of continuous working from the last setup, the appliance turns off and closes automatically. This ensures the unit cannot accidentally be left running whilst away.

GREASE FILTERS SATURATION:

After 30 hours of working, the speed indicators will all flash simultaneously, signaling the grease filters saturation.

To reset this alarm, hold down the "TIMER" button for at least 3 seconds, while the carriage is open.

CALIBRATION:

The rangehood carries out its self-calibration every 3 complete cycles of its extractable unit.

By pushing the "TIMER" button 6 times consecutively (MAX break between one push and the other is 3 sec.) all the LEDs will flash and the calibration will be reset.

After the next 3 cycles the downdraft will carry out its self-calibration.

STAND-BY:

When the extractable unit is closed and the light is switched off, the control panel, after 6 seconds, activates the Stand-by function, reducing the brightness of the LEDs.

This function can be stopped by pressing ON/OFF or LIGHT button.

SAFETY CLOSE FUNCTION:

If an obstacle is preventing the downdraft from lowering completely, the downdraft will automatically raise to prevent damage to the unit.

CLEANING THE RANGEHOOD

Careful maintenance ensures proper operation and good performances over time.

CAUTION

The hood must be disconnected from the electrical network, both by unplugging the appliance from the socket and activating the magnetic circuit breaker (safety cut-out), before removing the metal grease filters. After cleaning operations, replace the metal grease filters as outlined in the installation instructions.

MAINTENANCE	HOW TO PROCEED?	ACCESSORY PRODUCTS TO USE
External surfaces and accessories	Do not use metallic scrubbers, abrasive products, or hard brushes.	To clean the external surfaces of the rangehood and the light housing screen use only commercially available household detergents diluted in water. Then rinse with clean water and dry with a soft cloth.
Filter cleaning	After 30 hours of operation, the downdraft will signal the grease filter saturation. The saturation is signaled by the blinking of the 4 central LEDs. To reset, hold down the timer button for at least 3 seconds, while the carriage is open.	The grease filters can be washed by hand or in the dishwasher. These filters need to be cleaned on a regular basis, otherwise they may represent a fire risk. If frying or cooking with oil, the filers need to be cleaned more regularly. Refit the grease filters and front panel, making sure that the panel is properly fitted at the sides so that it does not cause the downdraft to stop operating.
NB: Filters should be replaced approximately every 6 months, depending on style and frequency of cooking. For high fat cooking it is recommended the clean the filters every 2 weeks.		

TROUBLESHOOTING

PROBLEM	SOLUTION
The rangehood does not work.	Check that: · There is not a power outage. · A specific speed has actually been selected. · The 6 pin connection is inserted properly. · The red reset key, found over the electrical system box, is pushed. · Make sure that the wires of the 9 pole connection are inserted properly in the connector itself (during the connection phase, an excessive pressure could bend the contacts).
The rangehood has low performance.	Check that: · The motor speed selected is sufficient for the quantity of fumes and vapors present in the room. · The kitchen is ventilated well enough to allow air for intake. · The non-return valves of the suctioning unit are free to rotate. · The ducting is clear and not obstructed. · Unit is only working on 2 speeds - refer to page 5. · The correct minimum diameter ducting has been used
The rangehood stops in the middle of operation.	Check that: · There is not a power outage. · The safety switch has not tripped (RCD or safety switch).

EXPLODED VIEW - 1180MM

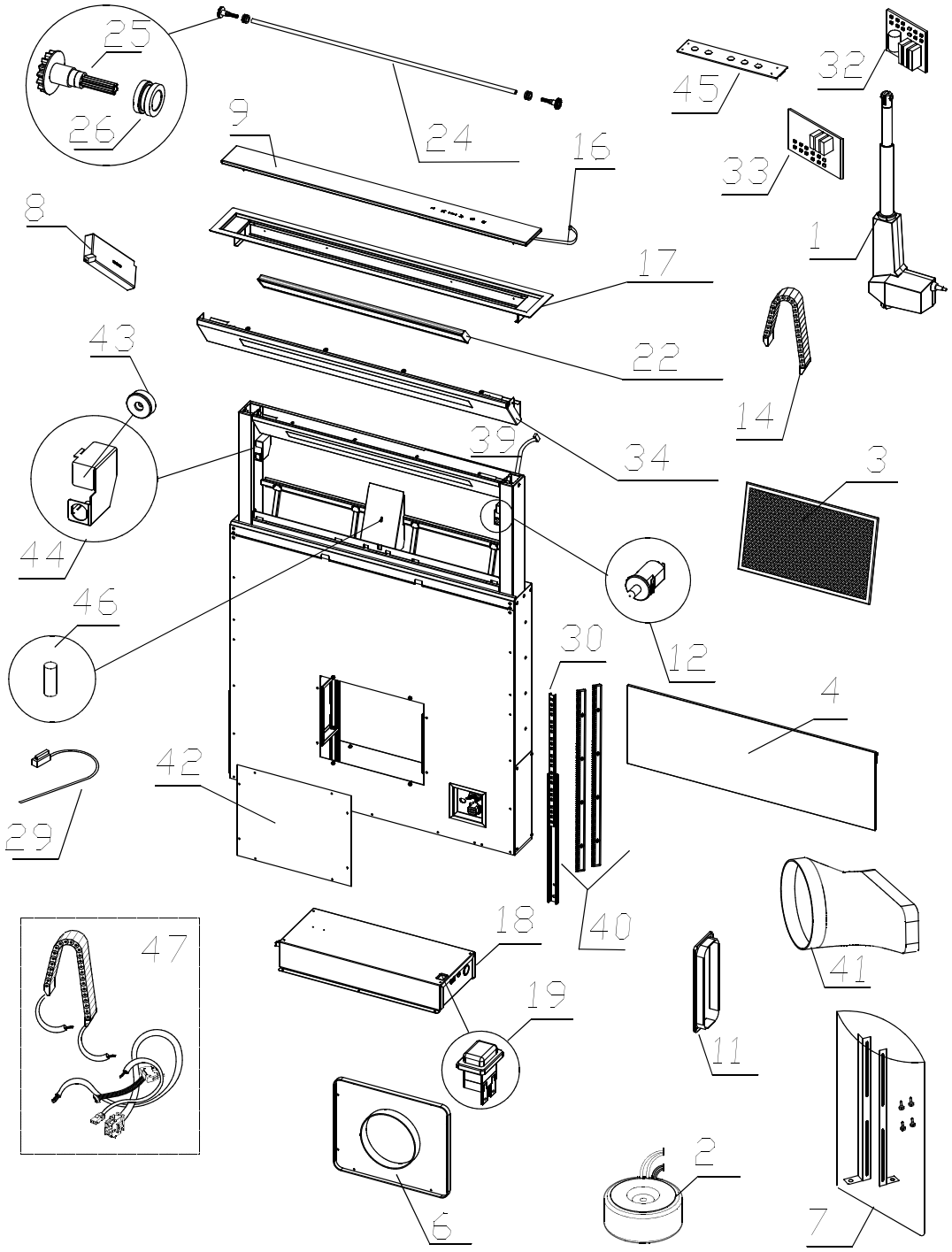

1	Actuator Group 75072099999	12	Buttons 75025100335	26	Brass Rod 75501000015	42	Closure Plate 75059000082
2	Transformer 35VA 230V/12V 75075030499	14	Chain 75074516018	29	Magnetic Sensor 75075030312	43	Magnet 20x3 75096000553
3	Filter 75071505035	16	Flat Cable 44024999111	30	Slide Guide 75181734380	44	Magnet Cover 75025700150
4	Front Panel for Magnet 750214001120	17	Body Liner 75002301187	32	Electric Board 75075034398	45	Control Base 75224499991
6	Front Air Outlet 75021001197	18	Cable Box 44024999111	33	Electric Board 75004240999	46	Magnetic Unit 75075030314
7	Accessories 75002002999	19	Emergency Switch / Reset 75470199999	34	LED Cover 75025110132	47	Cables 75006912107
8	Transformer DC 12V 75007026320	22	LED Bar 9W 75070000018	39	Flat Cable 75023899999		
9	Flush Top Panel 75024924920	24	Gear Rod 75180030197	40	Rack (2pc) 75036099999		
11	Lower-Lateral Chimney Joint 75070102735	25	Gear Wheel 75180030400	41	Reduction Piece 75000081020		

EXPLODED VIEW - 880MM

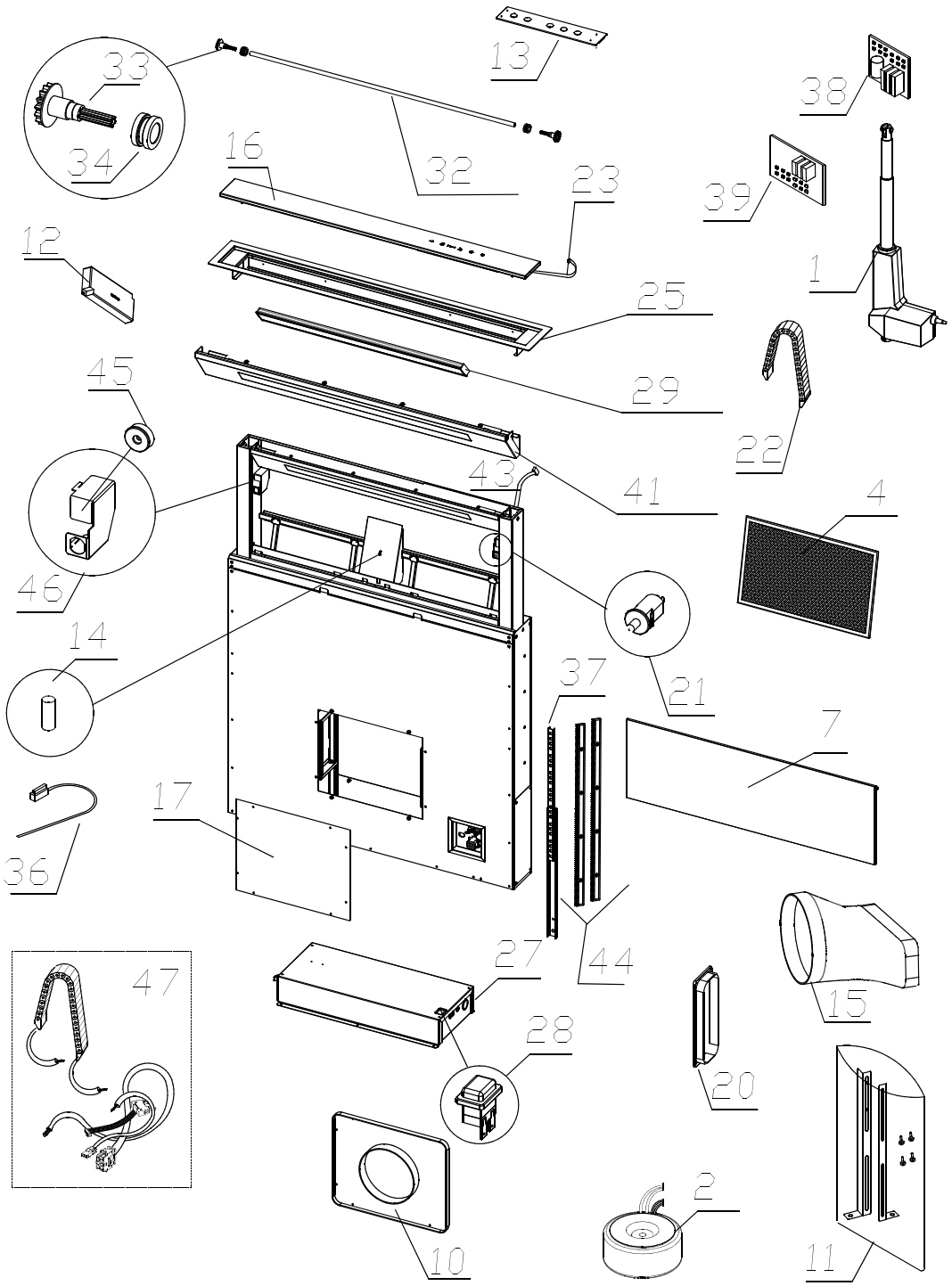

1	Actuator Group 75072099999	15	Reduction Piece 75000081020	28	Emergency Switch / Reset 75470199999	41	LED Cover 75025100076
2	Transformer 35VA 230V/12V 75075030499	16	Flush Top Panel 75024924920	29	LED Bar 9W 75070000017	43	Flat Cable 75023899999
4	Filter 75071505033	17	Closure Plate 75059000082	32	Gear Rod 75180030021	44	Rack (2pc) 75036099999
7	Front Panel 75021301880	20	Lower-Lateral Chimney Joint 75070102735	33	Gear Wheel 75180030400	45	Magnet 20x3 75096000553
10	Front Air Outlet 75021001197	21	Buttons 6A 75025100335	34	Brass Rod 75501000015	46	Magnet Cover 75025700150
11	Accessories 75002002999	22	Chain 75074516018	36	Magnetic Sensor 75075030312	47	Cables 75006912107
12	Transformer DC 12V 75007026320	23	Flat Cable 44024999111	37	Slide Guide 75181734380		
13	Control Base 75224499991	25	Body Liner 75002571515	38	Electric Board 75075034398		
14	Magnetic Unit 75075030314	27	Cable Box 44024999111	39	Electric Board 75004240999		

EXPLODED VIEW - 580MM

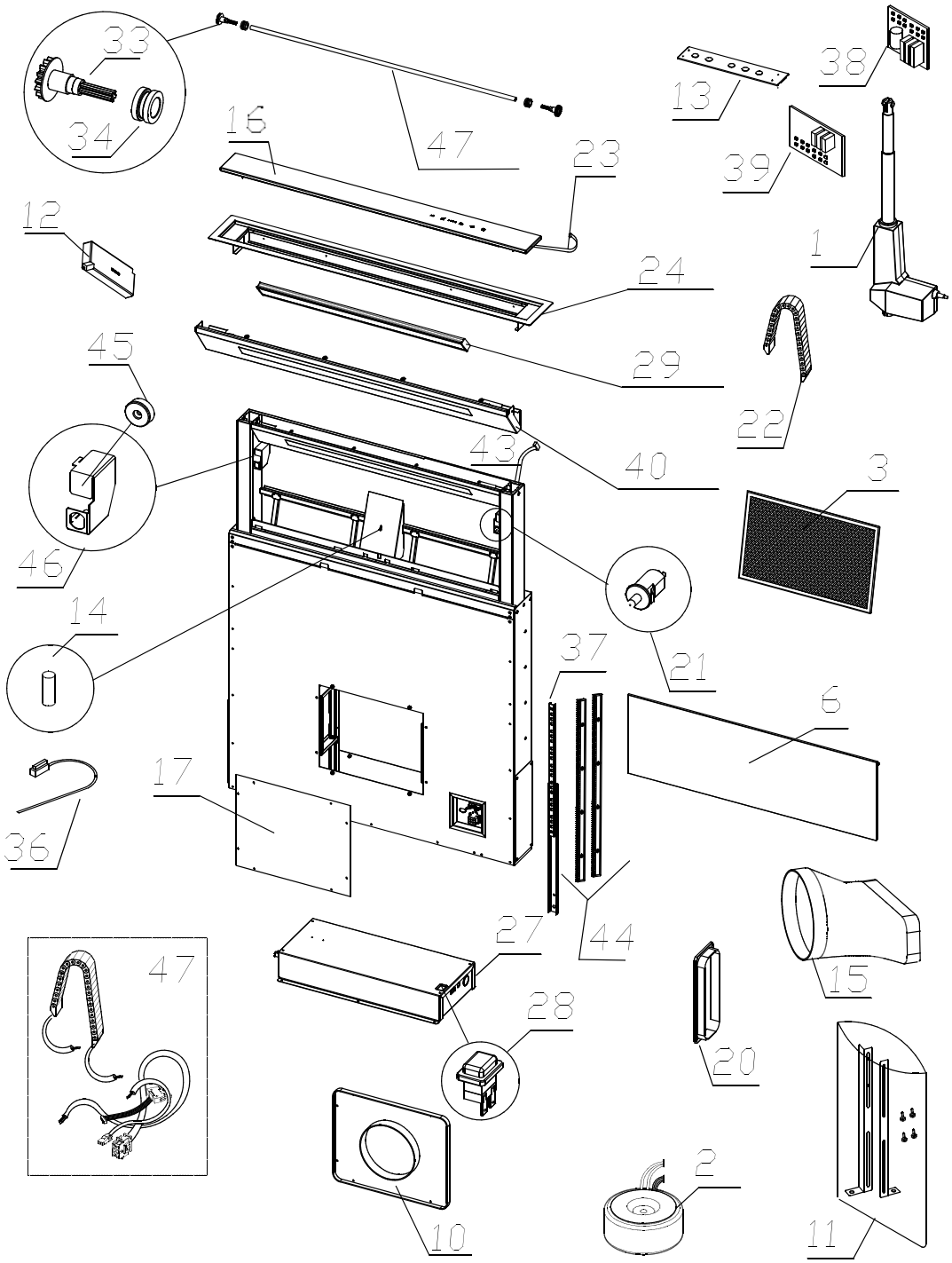

1	Actuator Group 75072099999	15	Reduction Piece 75000081020	28	Emergency Switch / Reset 75470199999	40	LED Cover 75025100034
2	Transformer 35VA 230V/12V 75075030499	16	Flush Top Panel 75024924320	29	LED Bar 9W 75002400326	43	Flat Cable 75023899999
3	Filter 75071505034	17	Closure Plate 75059000082	32	Gear Rod 75180030153	44	Rack (2pc) 75036099999
6	Front Panel 75021400580	20	Lower-Lateral Chimney Joint 75070102735	33	Gear Wheel 75180030400	45	Magnet 20x3 75096000553
10	Front Air Outlet 75021001197	21	Buttons 6A 75025100335	34	Brass Rod 75501000015	46	Magnet Cover 75025700150
11	Accessories 75002002999	22	Chain 75074516018	36	Magnetic Sensor 75075030312	47	Cables 75006912107
12	Transformer DC 12V 75007026320	23	Flat Cable 44024999111	37	Slide Guide 75181734380		
13	Control Base 75224499991	24	Body Liner 75002301079	38	Electric Board 75075034398		
14	Magnetic Unit 75075030314	27	Cable Box 75072301199	39	Electric Board 75004240999		

INCLUDED PARTS

PART A

Rectangular to round ducting adaptor
SPS-75000081020

PART B

Bottom/side cover collar
SPS-75070102735

PART C

Bottom/side exit connector
SPS-75070100094

PART D

Front/rear vent adaptor
SPS-75070100311 (For 58 Model)
SPS-75070100071 (For 88/118 Model)

PART E

Front/rear vent cover plate
SPS-75059000082

PART F

Upright fixing brackets
SPS-75070100112

DUCTING COMPONENTS NOT INCLUDED

PART G

Universal ring clamp
URC25-215/325

PART H

150mm to 200mm Duct expander
GDR 150/200

PART I

150mm diameter connector piece
GDC-150

PART J

200mm diameter connector piece
GDC-200

PART K

Semi rigid aluminium ducting 150mm / 200mm
SRPRO 30/150 or SRPRO 30/200

PART L

220X90mm Rectangular piece
SPS-66102291000

WIRING DIAGRAM

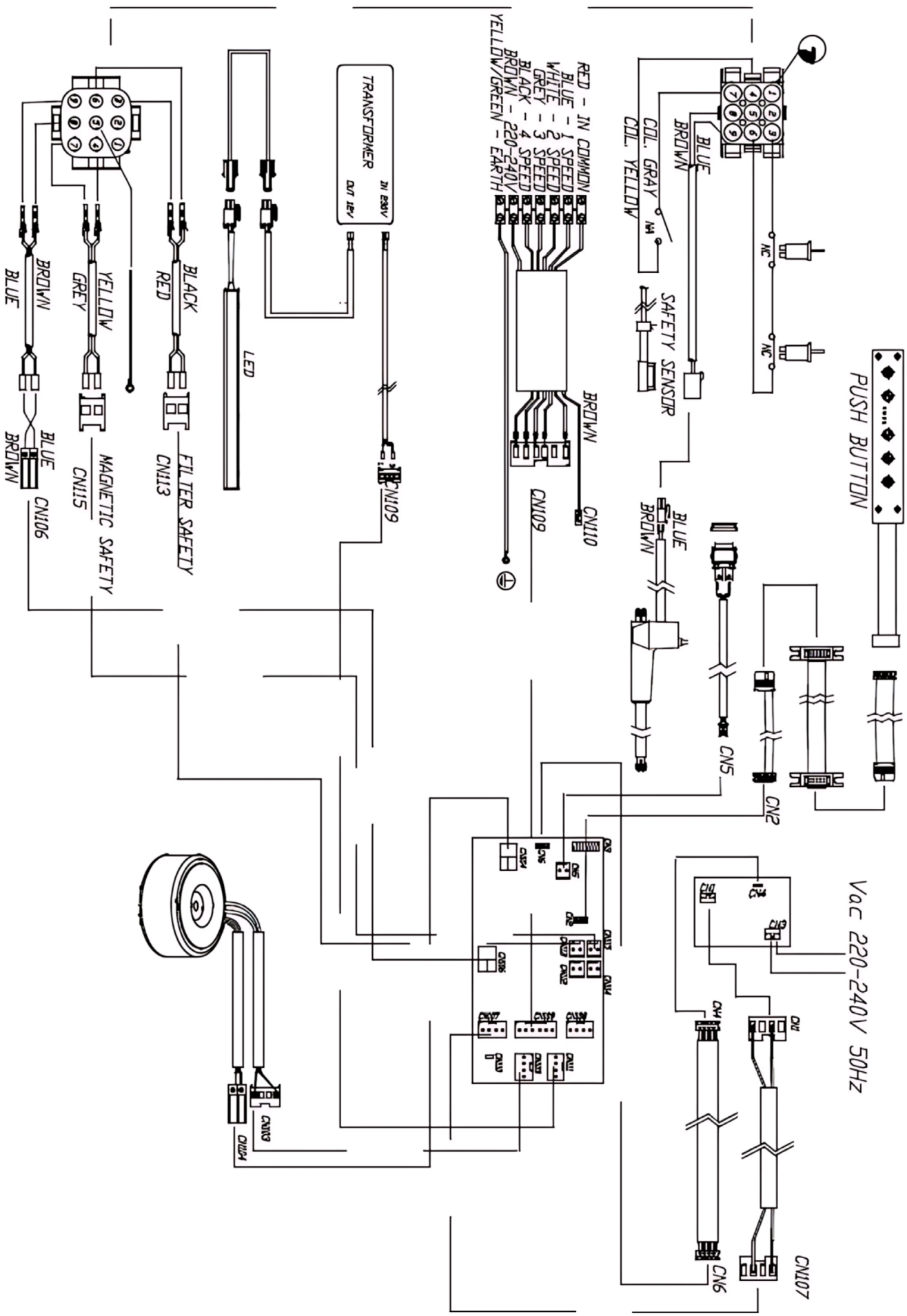

WARRANTY INFORMATION

Dear Customer,

Thank you for choosing this Sirius Rangehood.

We are sure that it will provide you with many years of excellent service. At Arisit Pty Limited we are dedicated to ensuring that our customers receive the best possible after-sales care.

The Sirius 'Protection Plan' has been devised to give you added peace of mind. Should you encounter any problems with your appliance, our nationwide team of specially trained technicians will deal with your call swiftly and efficiently.

PRIORITY SERVICE, ACCESSORIES & SPARE PARTS

AUSTRALIA
ARISIT PTY LIMITED
40-50 Mark Anthony Drive, Dandenong South,
VIC 3175, Australia
Phone: 1300 762 219
Email: arisit@arisit.com

NEW ZEALAND
ARISIT PTY LIMITED
Phone: (09) 306 1020
Email: arisit.nz@arisit.com

Warranty

By registering your ownership NOW, you qualify for Sirius's Total Peace of Mind Protection Plan.

Australian & New Zealand 3 / 6 Year Protection Plan*

This guarantees your appliance for a full 3 years parts and labour & 10 years for the off-board motors (covering manufacturing defects only) from the date of purchase, subject to the Terms and Conditions overleaf.

***3 Year warranty is extended to a 6 year period only when Sirius ducting is installed.**

6 Year Warranty
when Sirius ducting is used

Your Warranty

Register now to qualify.

Terms & Conditions

These Terms and Conditions apply only to Sirius products distributed in Australia and New Zealand by Arisit Pty Limited.

1. This warranty applies for a period of 3 years on all products.

a) Warranty is extended to a 6 year period when Sirius ducting is installed.

b) All off-board motors are covered under warranty for a 10 year period for manufacturing defects only.

2. Warranty applies for parts and labour in Australia and New Zealand, commencing from date of purchase.

3. This warranty applies only to the original purchaser/hire purchaser of this appliance and cannot be assigned or transferred. Failure to produce documentary proof of the date of original acquisition by the original purchaser will result in a charge being levied for work done, labour and parts supplied.

4. This warranty does not apply to:

a) Consumable items such as filters, fuses, and light bulbs.

b) Damage to body work, paint work, glass, and plastic items (such as, but not limited to windows, covers, baskets, trays, worktops, door handles, control and kick panels.)

c) Corrosion & rust damage. A fee may be charged following warranty claims where no fault is found with the appliance

5. This warranty will not apply where:

a) The fault is caused by accident, misuse, an infestation of insect and or vermin, fire, flood or the use of products not approved by Arisit Pty Limited.

b) There has been a failure to comply with the manufacturer's operating and installation instructions.

c) Service, modification or repair has been carried out by anybody other than an approved Arisit Service Technician.

d) The appliance has been used/ installed anywhere other than a private dwelling, or where it has been used other than for domestic use.

e) The appliance is subject to a rental agreement.

6. Any defective part that has been replaced becomes the property of Arisit Pty. Limited.

7. This warranty applies only to Sirius appliances purchased and installed in Australia and New Zealand.

8. Loss of use of the appliance or consequential loss of any nature is not covered.

9. A charge may be levied at the discretion of Arisit Pty Limited if the call is deemed unnecessary or if the cause of failure is traced to external sourced such as, but not limited to: blown fused, power failure, faulty installation, customer misuse or negligence, etc

10. Where the appliance, the subject of a warranty claim or repair, is used or installed more than TWENTY (20) kilometres from the nearest Arisit Service Division or Authorised Service Agent, the cost of delivery to the nearest Service Division or travel costs for a technician or Authorised Service Agent shall be for the account of the Purchaser. Where a built-in appliance is located or installed outside the Arisit Authorised Service Agent's normal service area, additional travel and labour costs shall be the account of the

Purchaser .

11. Service is offered during normal business hours only, also appliances to have a clear access in a serviceable area

12. Arisit Pty Limited shall not under any circumstances be responsible in terms of this warranty for the replacement or repair of any part of the equipment which may have been damaged in transit, during and after installation or imperfections after installation.

13. Losses caused by act of God, failure to obtain spare parts, strikes or lockouts are not covered.

14. External off board motors must be installed a minimum of 2 metres and maximum of 7 metres away from the rangehood. This is for optimum sound and performance.

15. All motors must be accessible for servicing purposes and if installed above 2 metres from ground height additional cost will be incurred due to OH&S standards for service agents. Prior to install please check minimum & maximum installation details on the Sirius website, FAQ under support tab. We reserve the right to amend any of the above without prior notice.

16. This warranty does not affect your statutory rights.

To register your product for warranty, click the QR code or visit www.siriusaustralia.com/pages/register-new-product

6 Year Warranty when Sirius ducting is used

Full replacement warranty on parts and labour. Check website for T&Cs.
10 year warranty on SEM motors.

ARISIT PTY LIMITED (Australia)
ABN 23 091 515 294
40-50 Mark Anthony Drive
Dandenong South VIC 3175
P: Sales & Service: 1300 762 219
F: Sales & Service: (03) 9768 0838
E: arisit@arisit.com

ARISIT PTY LIMITED (New Zealand)
P: (09) 306 1020
E: arisit.nz@arisit.com

Sirius
AUSTRALIA & NEW ZEALAND

www.siriusaustralia.com
www.siriusnz.co.nz

Sirius Hoods and ducting products are only available from our select group of Sirius Professional Stockists nationwide. For the latest list of Sirius Stockists near you, please refer to www.siriusaustralia.com

All efforts have been made to ensure that the information provided in this brochure is correct at the time of printing. Due to continuous product improvement and ongoing development, Sirius reserves the right to make changes to the products and technical data without prior notice.
Some products appearing in this brochure may be for illustrative purposes only. Diagrams are indicative measures only. Prior to commencing cabinetry cutouts the operating/installation instructions accompanying the product must be referred to at www.siriusaustralia.com

valentina
collection

Sirius